ORDER NO. HAD85042489C1
A2

Service Manual

Turntable System

SL-L3

QUARTZ Direct Drive
Fully Automatic Turntable System

Color

(S)...Silver Type

Area

[M].....U.S.A.
[MC].....Canada

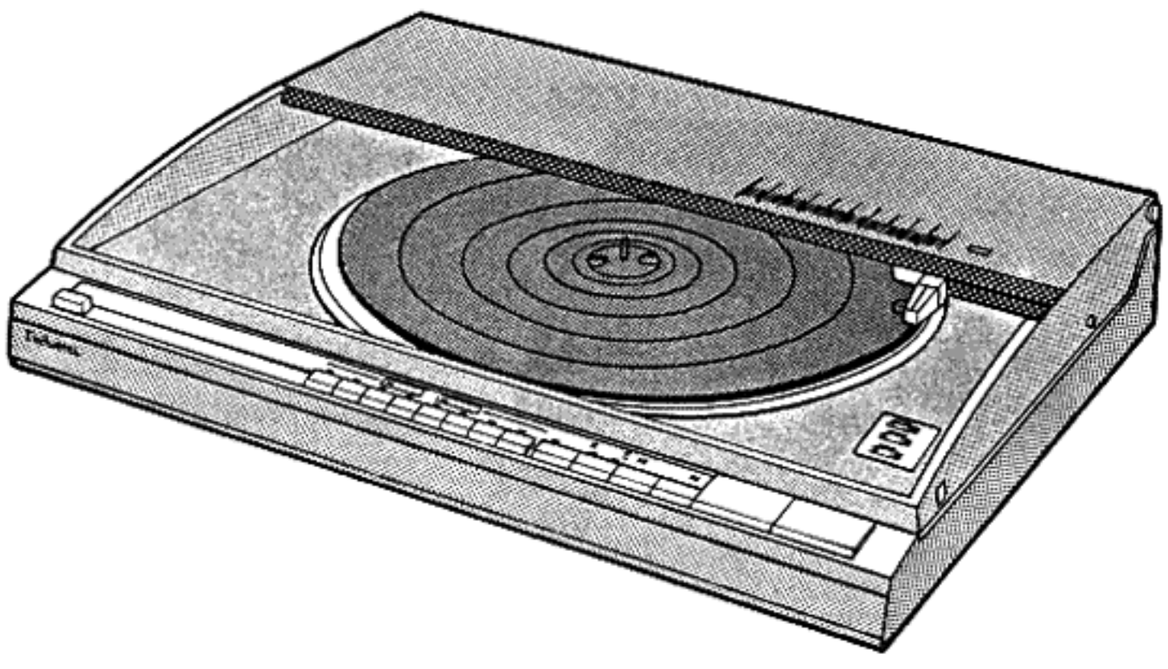

T4P is the standard mark for the "P-mount" plug-in-connector system. Products carrying this mark are interchangeable and compatible with each other.

SPECIFICATIONS

■ Turntable section

Type:	Quartz direct drive Automatic turntable system
Features:	Auto start/Auto lead-in, Auto return/Auto stop, Repeat play, Program play, Direct music select play, Forward and backward skip play, Forward and backward search play, Auto size select, Record presence detection
Drive method:	Direct drive
Motor:	Brushless DC motor
Drive control method:	Quartz-phase-locked control
Turntable platter:	Aluminum die-cast Diameter 30 cm (12")
Turntable speeds:	33-1/3 rpm and 45 rpm Auto speed select (Manual selection possible)
Wow and flutter:	0.012% WRMS* 0.025% WRMS (JIS C5521) ±0.035% peak (IEC 98A Weighted)

*Measured by obtaining signal from built-in frequency generator of motor assembly.

Rumble:	−56 dB (IEC 98A Unweighted) −78 dB (IEC 98A Weighted)

■ Tonearm section

Type:	Linear tracking tonearm 4-pivot gimbal suspension T4P
Effective length:	10.5 cm (4-1/8")
Tracking error angle:	Within ±0.1°
Effective mass:	9 g (including cartridge)
Resonance frequency:	12 Hz
Tonearm drive motor:	DC motor
Applicable cartridge weight:	6 g
Stylus pressure:	1.25 g (Fixed)
Phono cable capacitance:	150 pF

■ General

Power supply:	AC 120 V, 60 Hz
Power consumption:	16 W
Dimensions: (W × H × D)	43 × 9 × 35 cm (16-15/16" × 3-17/32" × 13-25/32") (Maximum height when dust cover is open) 39 cm (15-11/32")
Weight:	5.2 kg (11.5 lb.)

Specifications are subject to change without notice for further improvement.
Weight and dimensions shown are approximate.

Technics

Matsushita Engineering and Service Company
50 Meadowland Parkway,
Secaucus, New Jersey 07094

Panasonic Hawaii Inc.
91-238, Kauhi St. Ewa Beach
P.O. Box 774
Honolulu, Hawaii 96808-0774

Matsushita Electric of Canada Limited
5770 Ambler Drive, Mississauga,
Ontario, L4W 2T3

Panasonic Sales Company, Division of Matsushita Electric of Puerto Rico, Inc.
Ave. 65 De Infanteria, KM 9.7
Victoria Industrial Park
Carolina, Puerto Rico 00630

■ CONTENTS

	Page
LOCATION OF CONTROLS	3
DISASSEMBLY INSTRUCTIONS	4
HOW TO SET THE TONEARM DRIVE ROPE	7
PLAYING NON-STANDARD AND SPECIAL RECORDS AND MAKING ADJUSTMENTS	8
MEASUREMENTS AND ADJUSTMENTS	10
TROUBLESHOOTING	12
EXPLODED VIEW	15
REPLACEMENT PARTS LIST	17
RESISTORS AND CAPACITORS	19
HOW TO REPLACE CHIPS	20
CIRCUIT BOARD AND WIRING CONNECTION DIAGRAM	21
SCHEMATIC DIAGRAM	23
BLOCK DIAGRAM	27

■ SAFETY PRECAUTION (This "safety precaution" is applied only in U.S.A.)

1. Before servicing, unplug the power cord to prevent an electric shock.
2. When replacing parts, use only manufacturer's recommended components for safety.
3. Check the condition of the power cord. Replace if wear or damage is evident.
4. After servicing, be sure to restore the lead dress, insulation barriers, insulation papers, shields, etc.
5. Before returning the serviced equipment to the customer, be sure to make the following insulation resistance test to prevent the customer from being exposed to a shock hazard.

• INSULATION RESISTANCE TEST

1. Unplug the power cord and short the two prongs of the plug with a jumper wire.
2. Turn on the power switch.
3. Measure the resistance value with ohmmeter between the jumpered AC plug and each exposed metal cabinet part, such as screwheads antenna, control shafts, handle brackets, etc. Equipment with antenna terminals should read between 3MΩ and 5.2MΩ to all exposed parts. (Fig. A) Equipment without antenna terminals should read approximately infinity to all exposed parts. (Fig. B)

Note: Some exposed parts may be isolated from the chassis by design. These will read infinity.

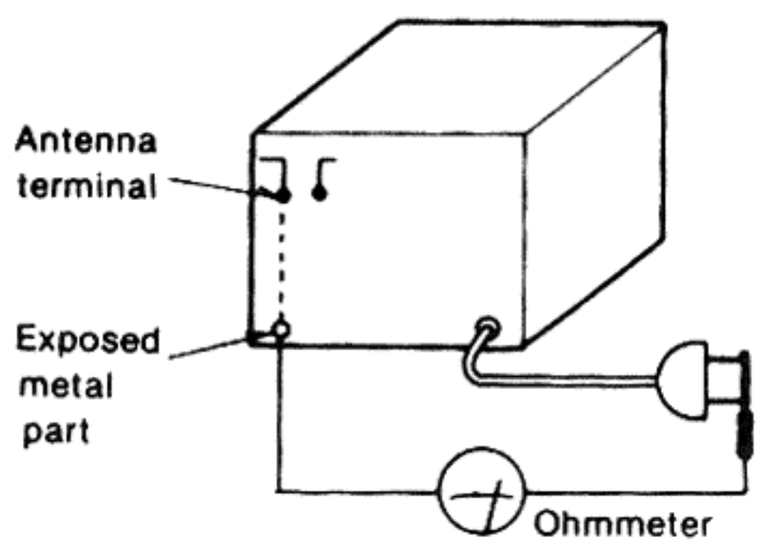

(Fig. A)

Resistance = 3MΩ—5.2MΩ

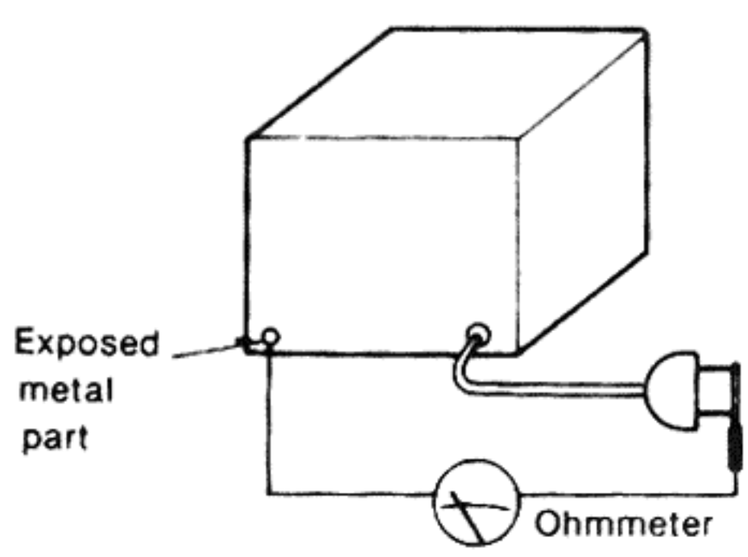

(Fig. B)

Resistance = Approx ∞

4. If the measurement is outside the specified limits, there is a possibility of a shock hazard. The equipment should be repaired and rechecked before it is returned to the customer.

■ LOCATION OF CONTROLS

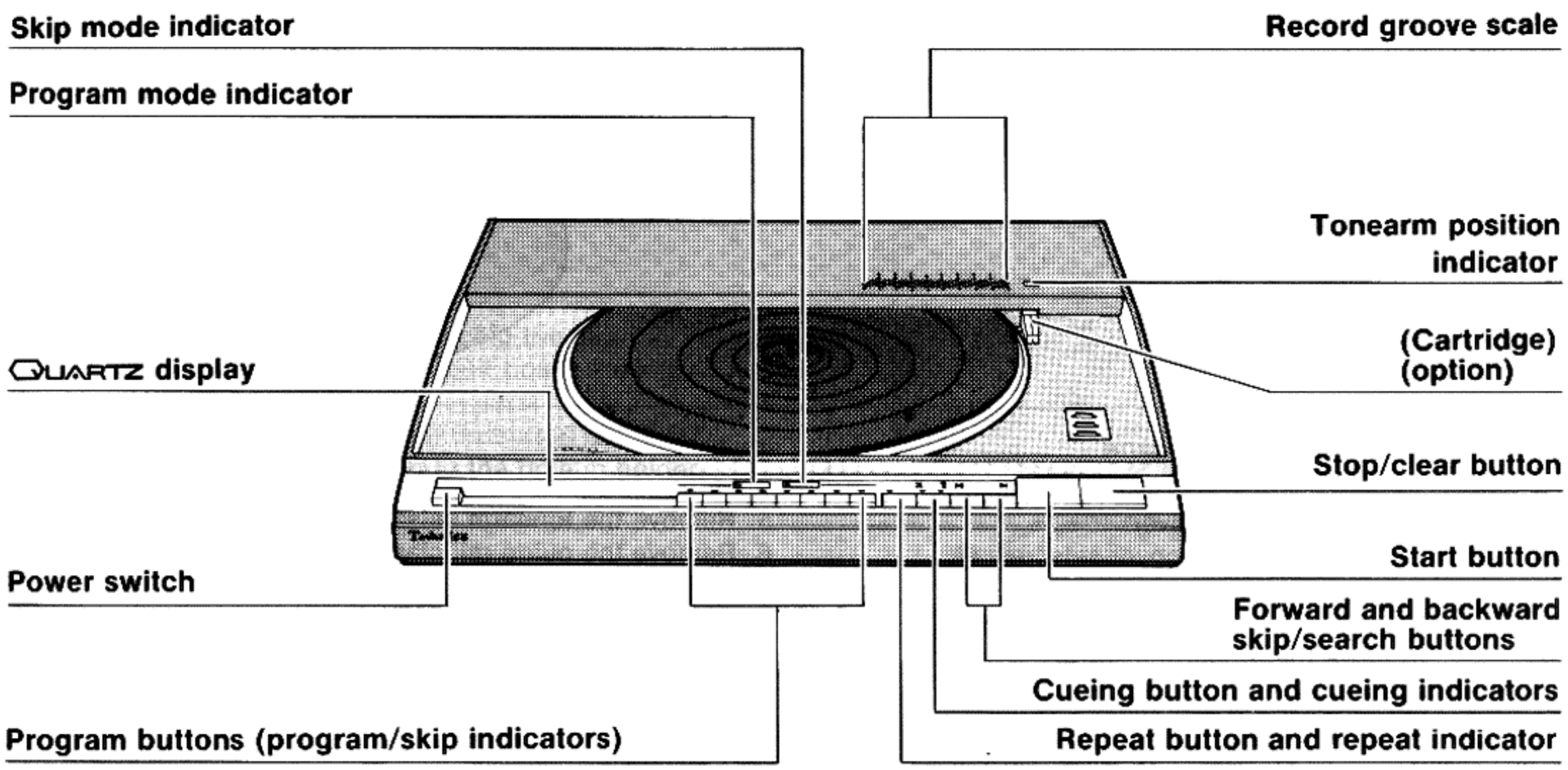

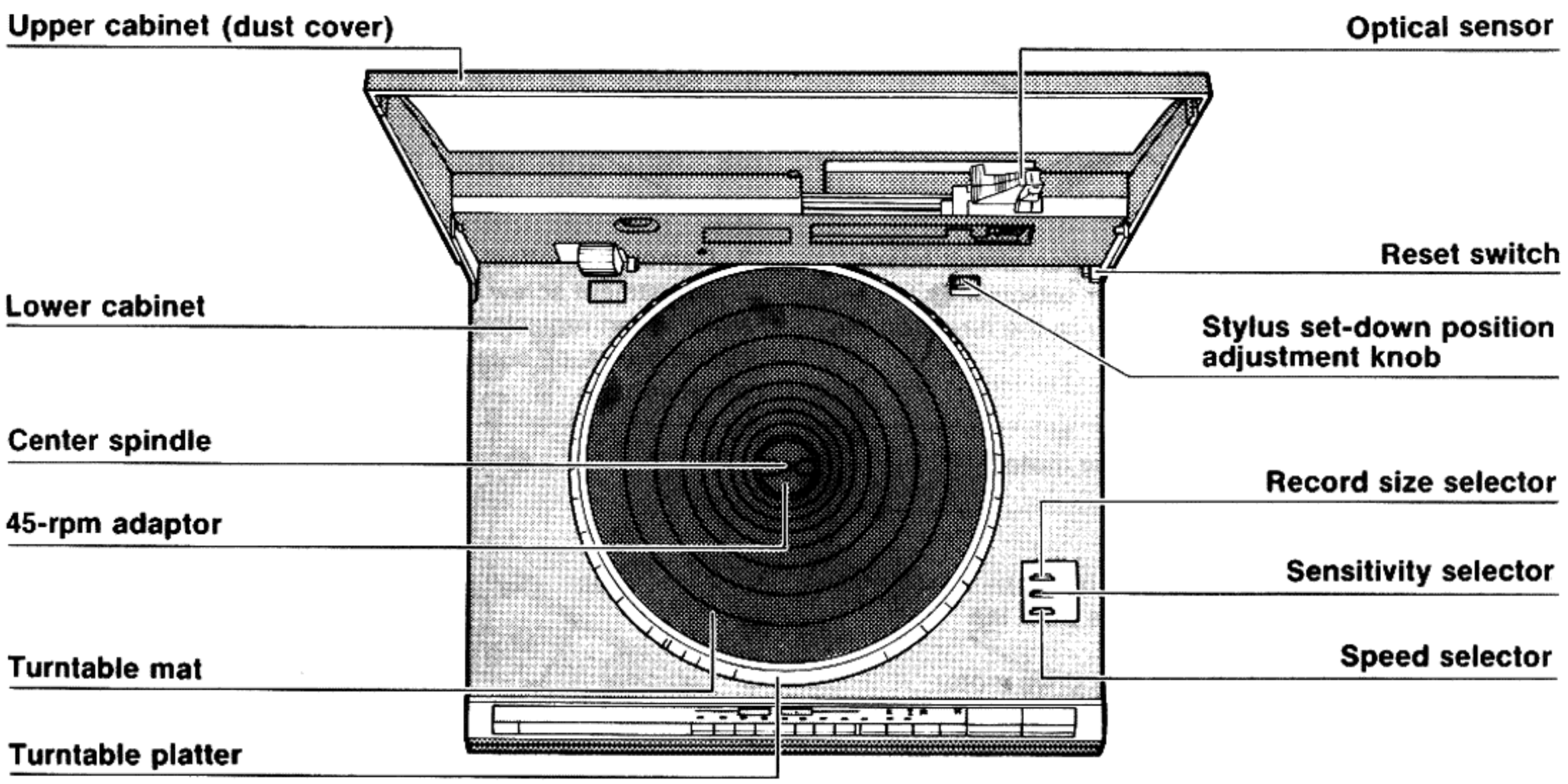

■ DISASSEMBLY INSTRUCTIONS

Ref. No 1	How to remove the cartridge
Procedure 1	1. Open the upper cabinet. 2. Remove the setscrew and pull out the cartridge. **Note:** When attaching the cartridge again, match the tonearm connector with the cartridge pin, then completely insert it and tighten the setscrew.

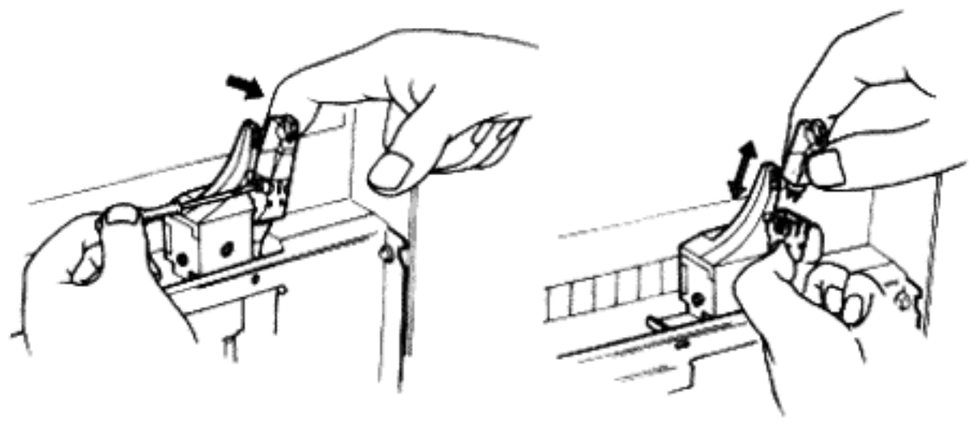

Ref. No 2	How to remove the turntable platter
Procedure 2	1. Open the upper cabinet. 2. Remove the turntable mat, and lift the turntable platter. **Note:** •When removing the turntable platter, it is not necessary to remove the 45 rpm adaptor. •The turntable platter is tightly fitted to the center spindle. When removing the turntable platter, take care not to damage the upper cabinet.

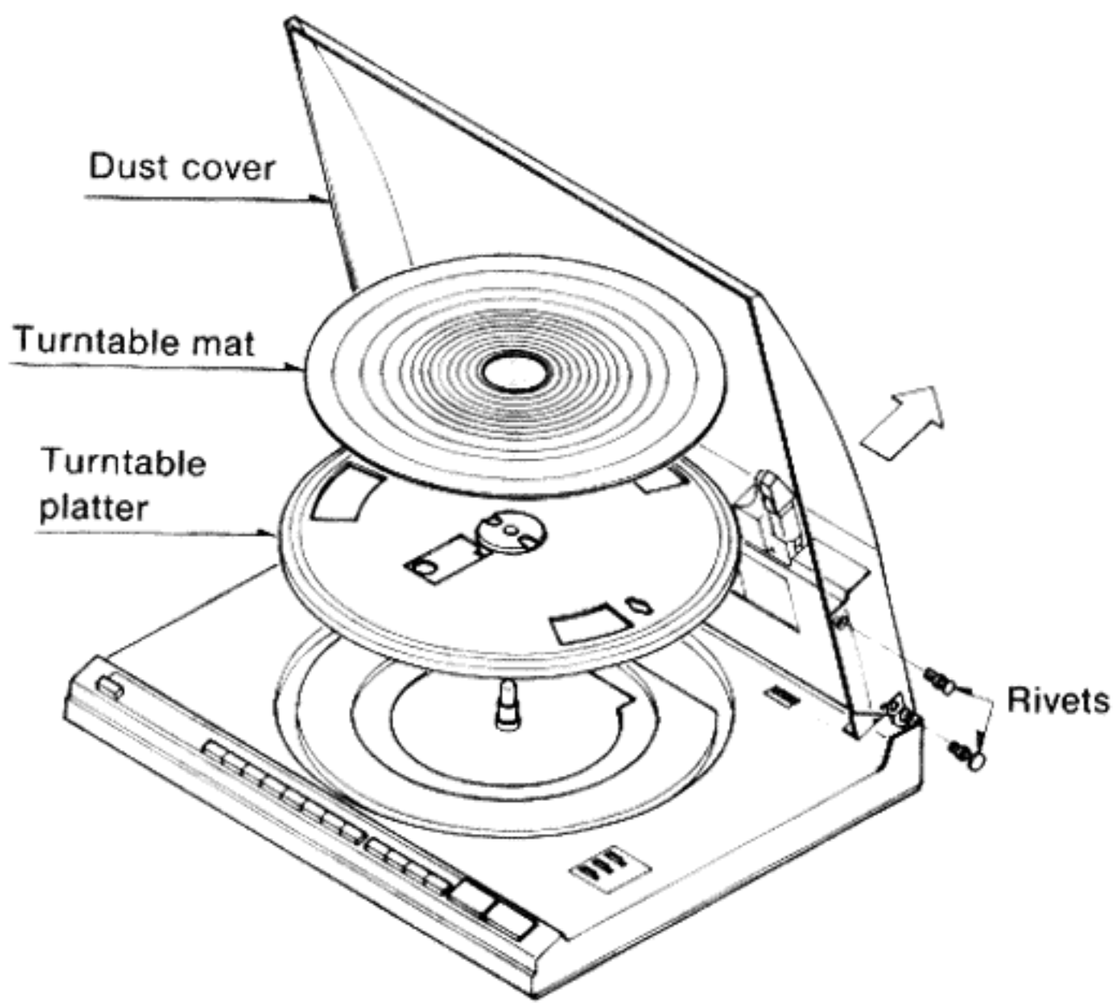

★ **To remove the dust cover**

1. Pull out the 4 right and left rivets.
2. Remove the dust cover in the direction of the arrow.

Ref. No 3	How to remove the 45 rpm adaptor
Procedure 2 ➧ 3	• The 2 adaptor claws fit into the turntable platter, so remove the 45 rpm adaptor by pushing it in the direction of the arrow.

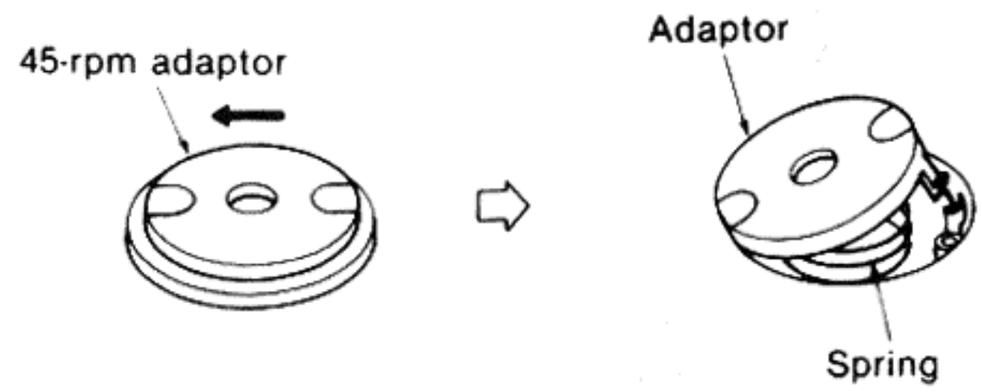

Note: When removing the 45 rpm adaptor, remove the turntable platter; otherwise the 45 rpm adaptor claws will be broken.

Ref. No 4	How to remove the bottom board
Procedure 2 ➧ 4	1. Turn over the unit on a soft cloth. 2. Remove the 6 setscrews (❶ ~ ❻).

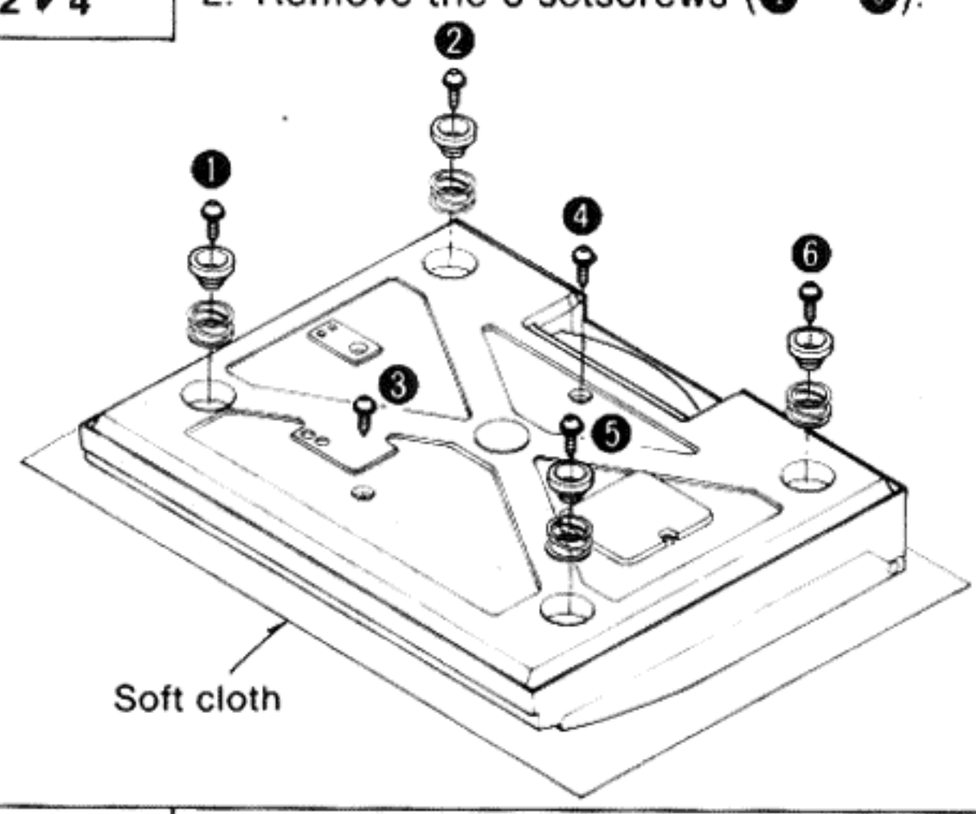

Ref. No 5	How to remove the power switch
Procedure 2 ➧ 4 ➧ 5	1. Remove the 3 setscrews (❶ ~ ❸). 2. Lift the holder slightly in the direction of arrow Ⓐ. 3. Pull out the power switch.

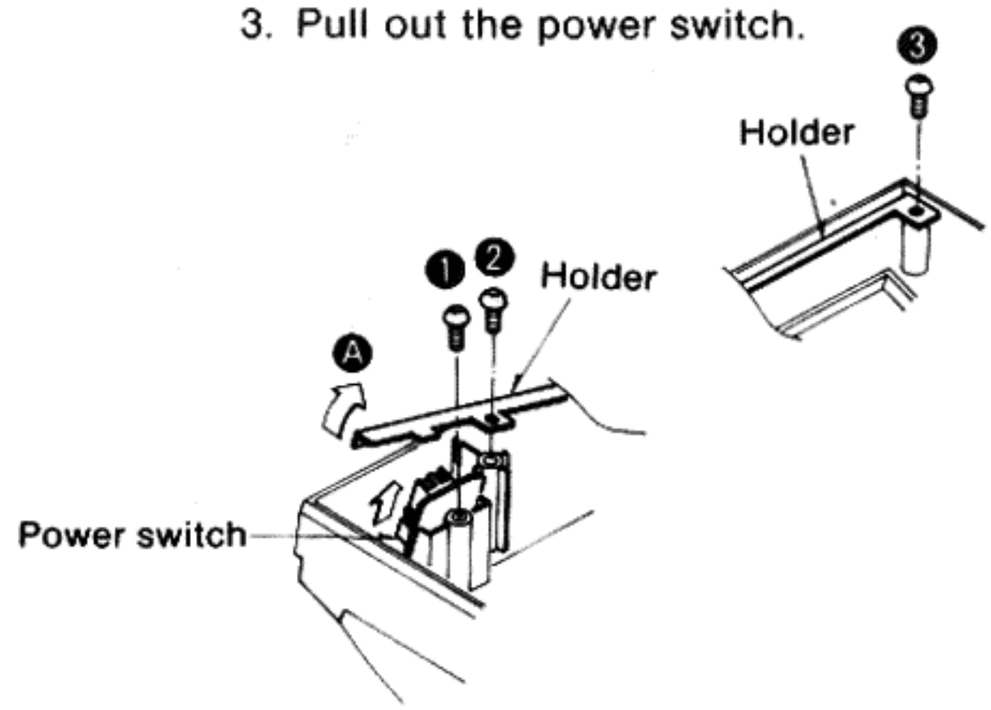

Ref. No 6	How to remove the operation circuit board
Procedure 2 ➧ 4 ➧ 6	

1. Remove the 8 setscrews (❶ ~ ❽).
2. Lift the circuit board up in the direction indicated by arrow Ⓐ.
3. Next, while Pulling in the direction of arrow Ⓑ, lift it up in the direction of the arrow Ⓒ.

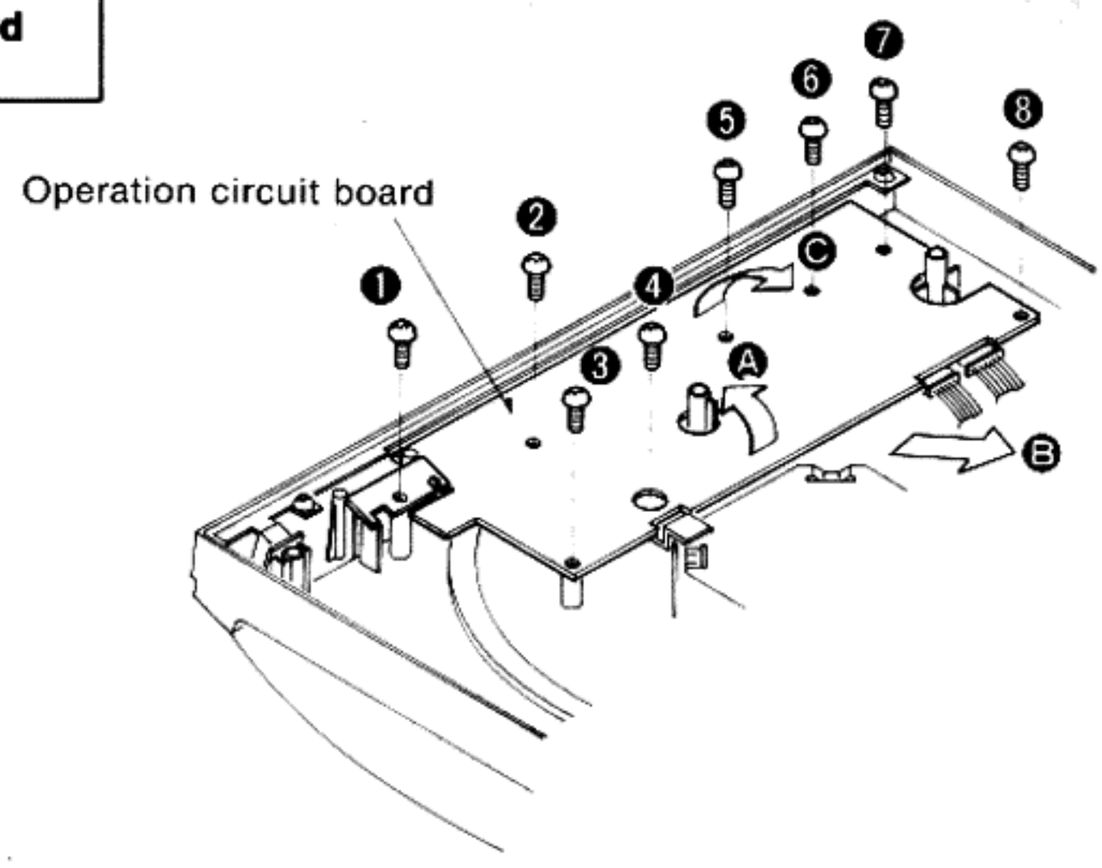

★ **Caution when replacing the board**

1. The operation circuit board fits into guide rails.
2. Match the operation button and program button to the hole in holder.

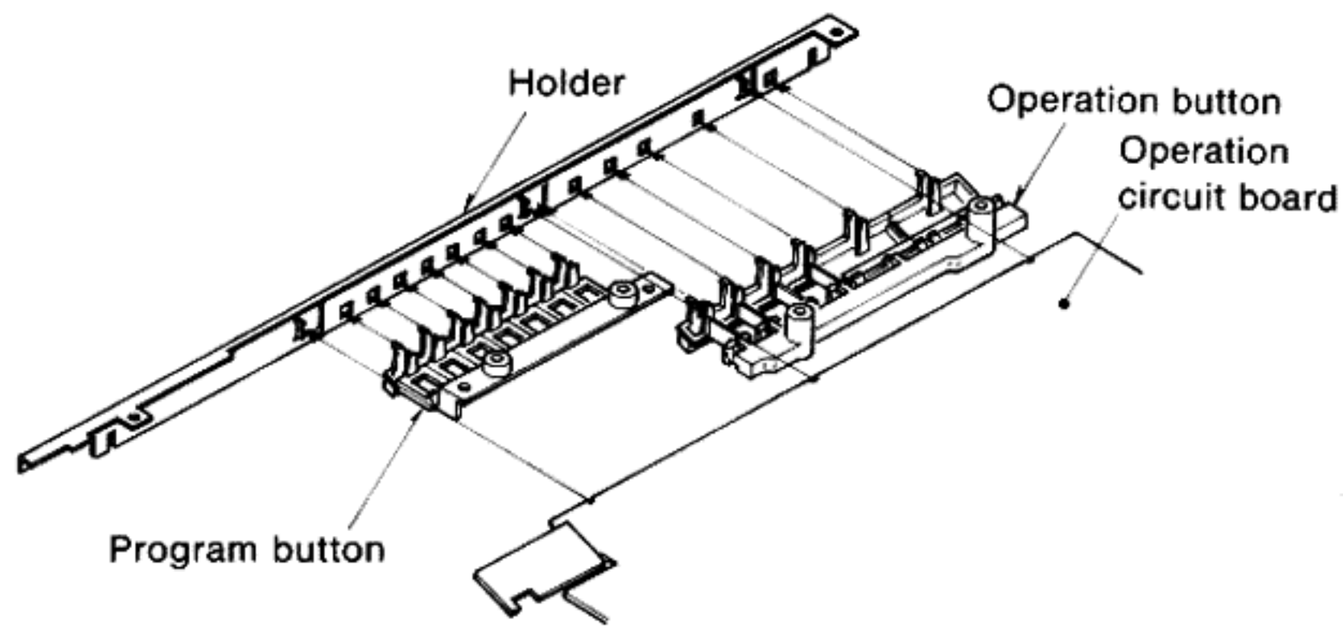

Ref. No 7	How to remove the drive circuit board and stator frame
Procedure 2 ➧ 4 ➧ 7	

1. Remove the 8 setscrews (❶ ~ ❽).
2. Pull out the connector CN101.
3. Lift the operation circuit board slightly in the direction of arrow Ⓐ.
4. Remove the stator frame in the direction of the arrow Ⓑ.
5. Cut off the stopper with nippers.
6. Remove the 4 setscrews (❾ ~ ⓬).
7. Then, separate the drive circuit board and stator frame.

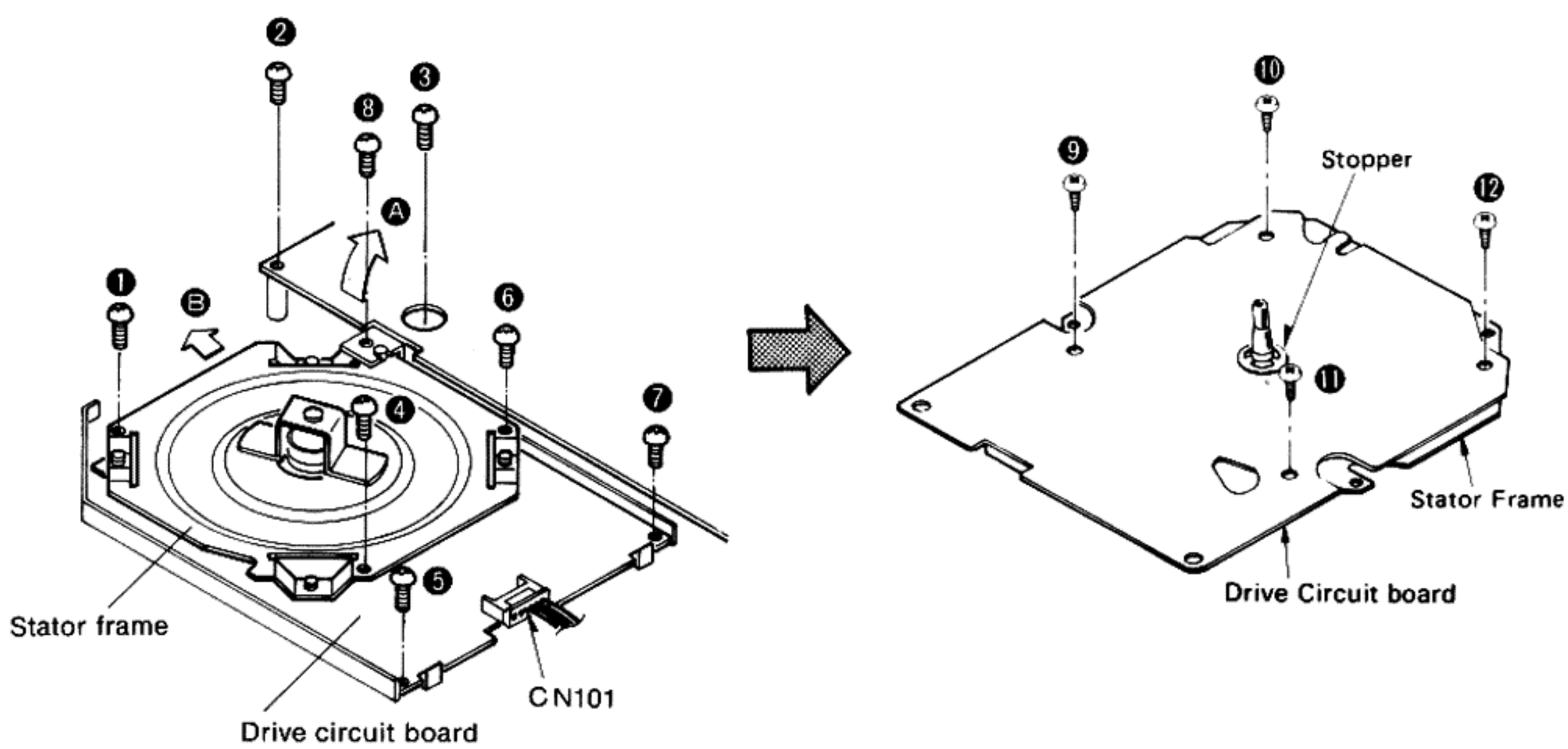

Ref. No 8	How to remove the Hall element
Procedure 2 ➧ 8	

1. Remove the terminal solder by use of solder sucker.
2. Hold the Hall element with a tweezers and remove it while touching the soldering iron to the terminal.

Note:
Fit the Hall element with the part No. print up.

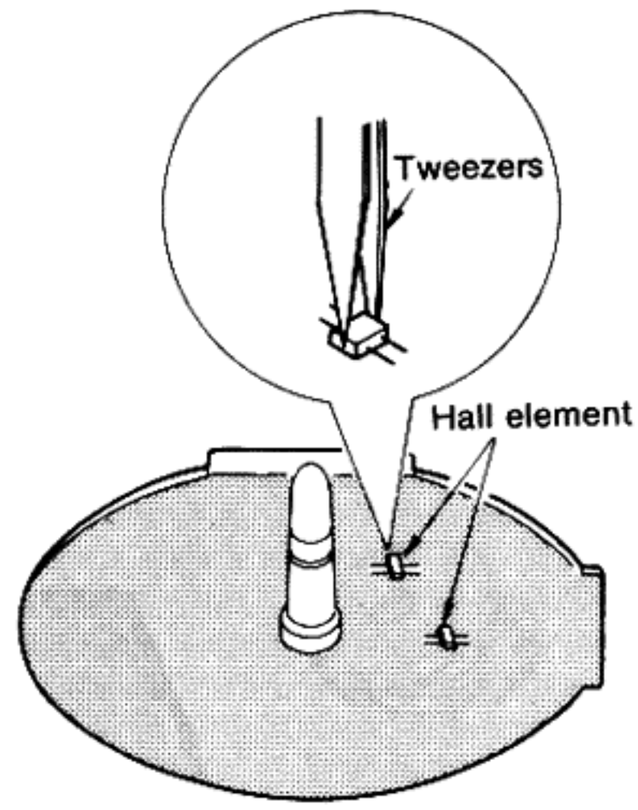

Ref. No 9	How to remove the tonearm
Procedure 2 ➧ 9	

1. Remove the dust cover.
2. Remove the shield cover setscrew ❶.
3. Unsolder the 5 lead wires.
4. Turn the worm gear with your fingers to move the tonearm inward.

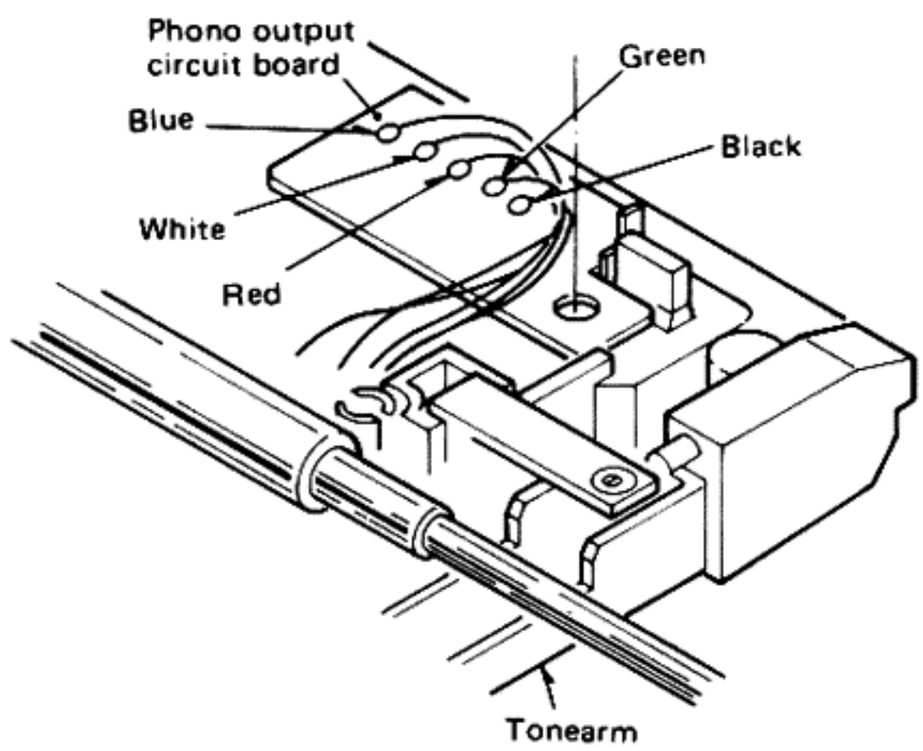

5. Remove the tonearm setscrew ❼.
6. Remove the guide rail clamper, and pull out the guide rail.
7. Remove the tonearm in the direction of arrow Ⓐ.

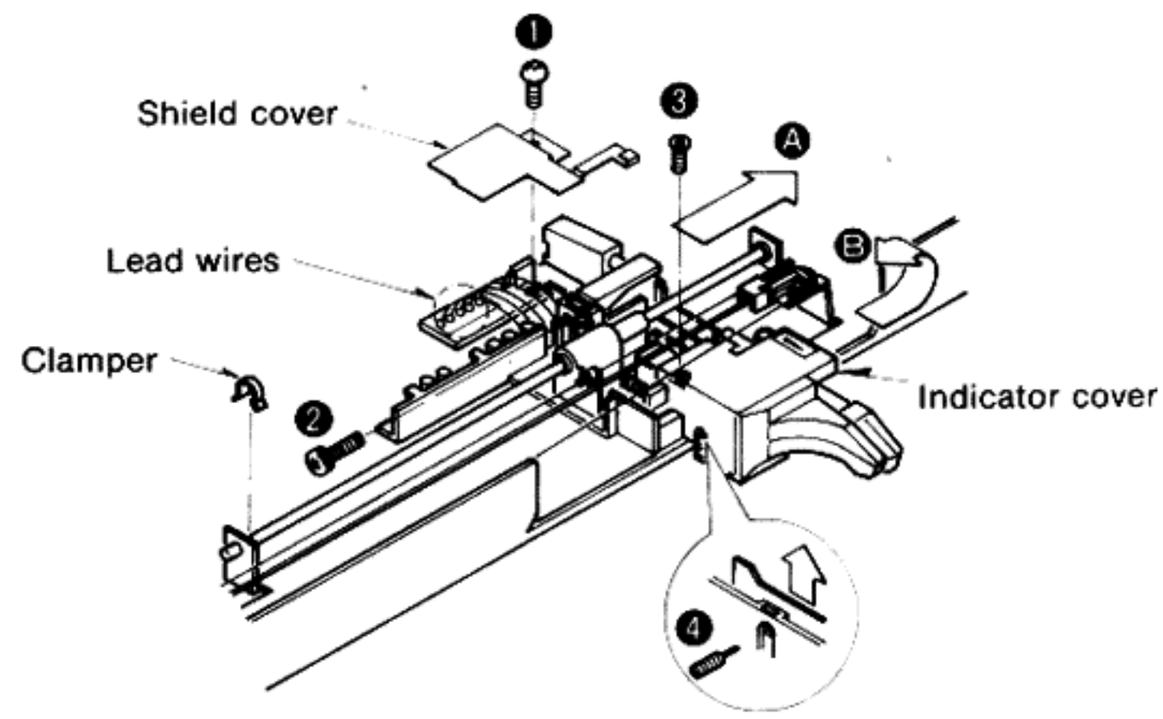

★ **To remove offset angle detection circuit board**

1. Remove the indicator cover setscrew ❸.
2. Remove the indicator cover in the direction the arrow Ⓑ.
3. Remove the offset angle detection circuit board adjustment screw ❹.

Note: When replacing the offset angle detection circuit board, be sure to adjust the servo gain and offset voltage.

Ref. No 10	How to remove the arm drive motor
Procedure 2 ➧ 10	

1. Remove the dust cover.
2. Remove the 2 setscrews (❶, ❷).
3. Unsolder the 2 lead wires from the motor.
4. Remove the belt and arm drive motor
5. Open the cushion rubber.

Note:
Connection of the arm drive motor
Red wire..... (+) terminal of the arm drive motor.
Blue wire ..... (−) terminal of the arm drive motor.

- An arrow mark is the (−) terminal.

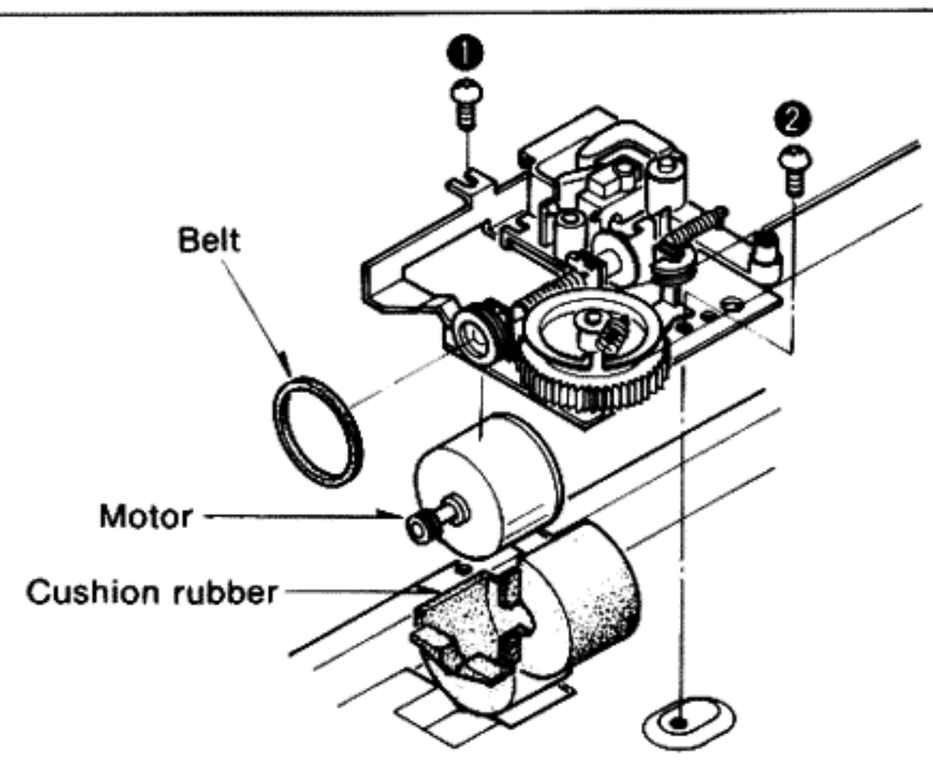

Ref. No 11	How to remove the stylus set-down position volume circuit board
Procedure 2 ▸ 4 ▸ 11	1. Remove the cover. 2. Remove the stylus set-down position volume circuit board setscrew ❶.

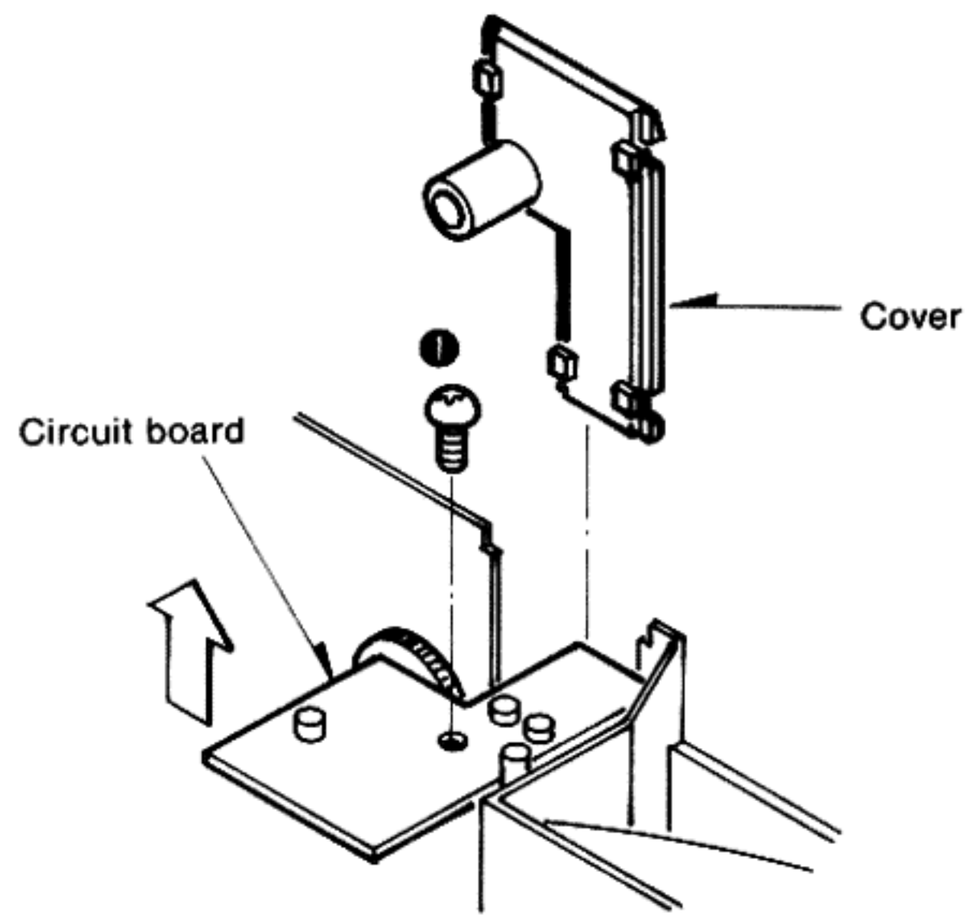

Ref. No 12	How to remove the reset switch
Procedure 2 ▸ 4 ▸ 12	1. Remove the screw ❶. 2. Remove the 2 claws of the switch holder. 3. Unsolder the 2 switch terminals. **Note:** When replacing the reset switch, be sure to open the upper cabinet.

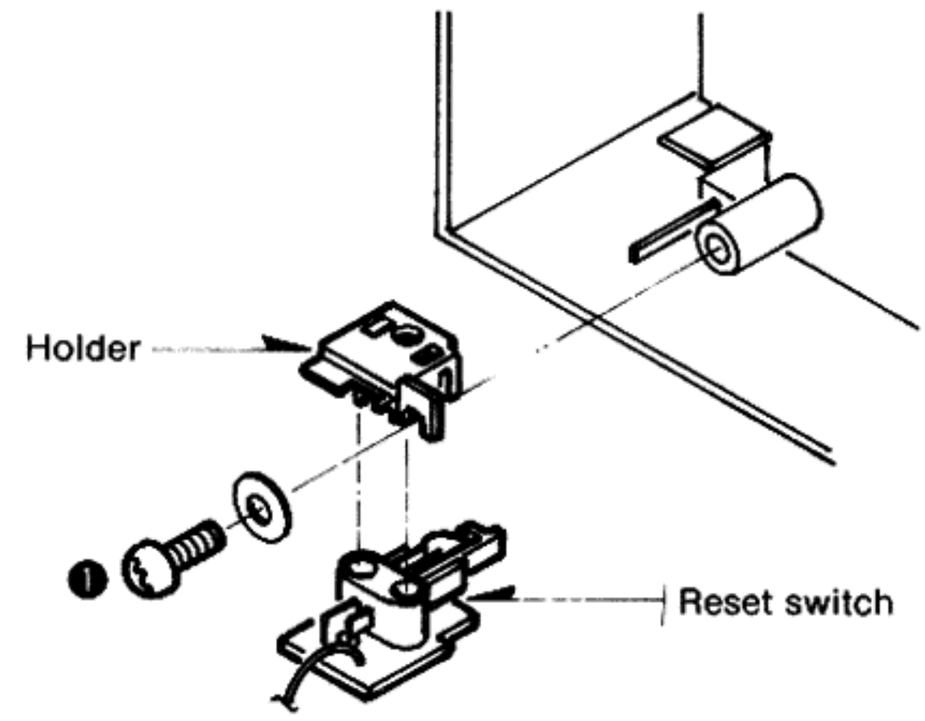

■ HOW TO SET THE TONEARM DRIVE ROPE

When setting the rope, follow the procedure given below.

1. Remove the dust cover.
2. Remove the roller cover.
3. Set the rope in the order of steps❶~❻.
4. Fit the rope connector to the tonearm.
5. Set the roller cover and turn the worm gear by hand to see that the tonearm moves.

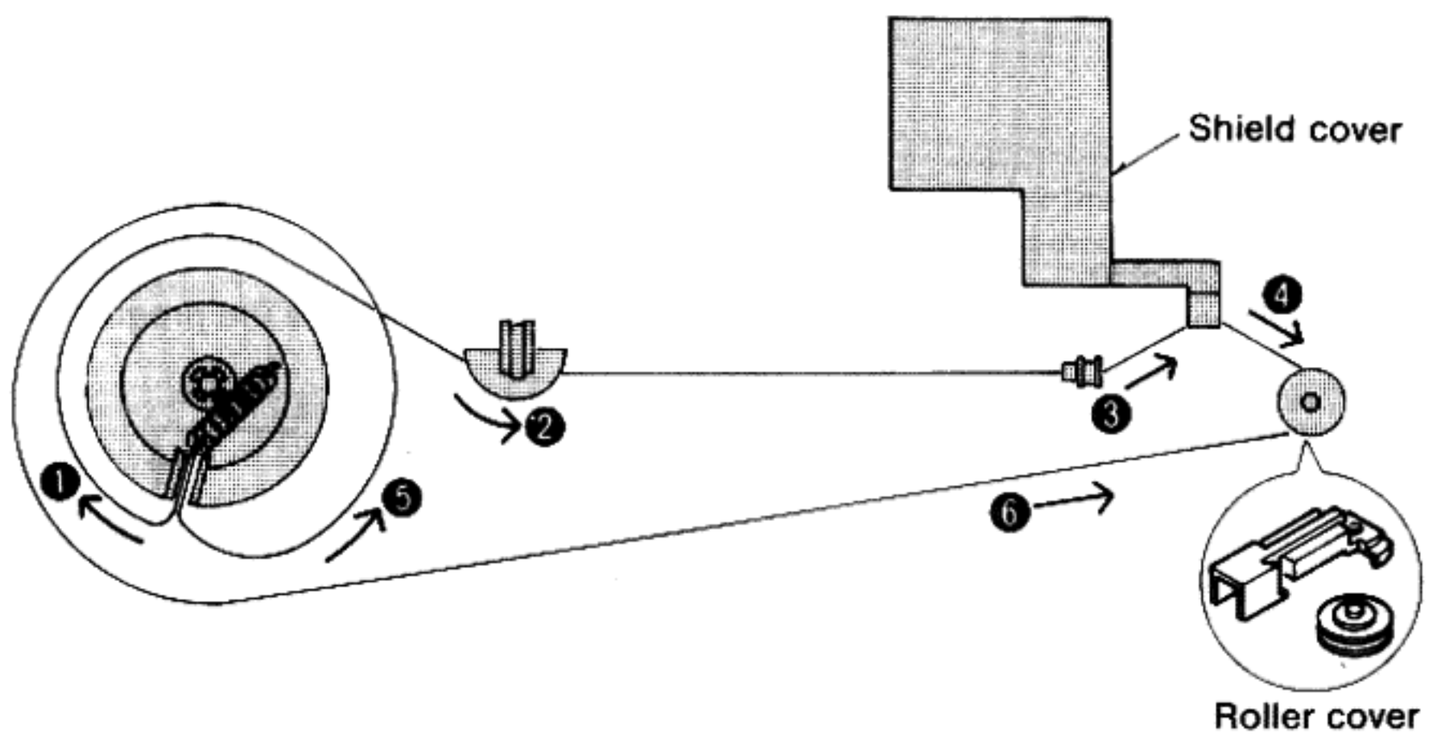

■ PLAYING NON-STANDARD AND SPECIAL RECORDS AND MAKING ADJUSTMENTS

In order to perform program record play, direct song selection, and forward and backward skip functions properly, this unit is designed so that the stylus is lowered shortly before (about 0.5 mm) the beginning of the between-songs gap. Because of this, no sound is heard for about ten seconds after the stylus contacts the record when using one of the above functions.

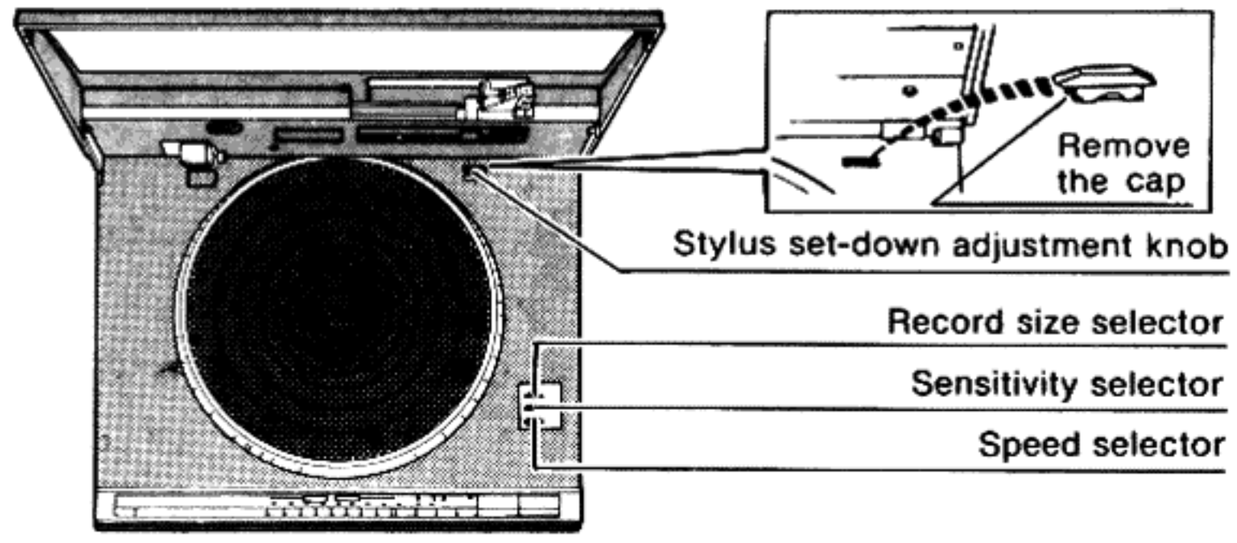

1. Adjusting the tonearm lowering position

- The stylus set-down adjustment knob is properly set at the factory. However, if it has been jarred loose during shipment, the tonearm may be lowered too far to one side as shown in the diagram to the right. If necessary, correct the problem as described below.

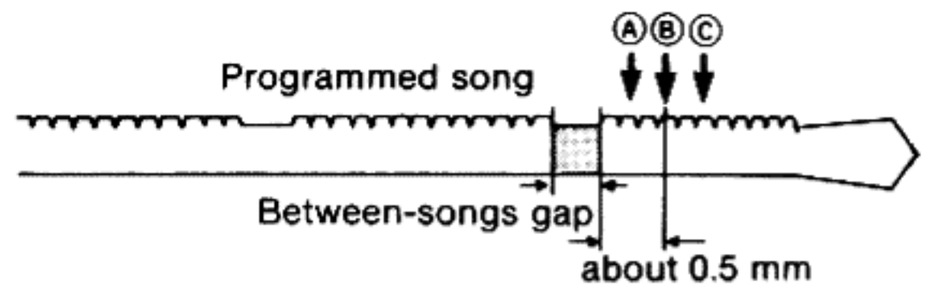

Ⓐ Tonearm lowered too far to the left.
Ⓑ Proper location
Ⓒ Tonearm lowered too far to the right.

Problem	Confirmation/Adjustment
Ⓐ **Tonearm lowered too far to the left** • No sound is heard even when the stylus reaches the beginning of the specified song.	① Set sensitivity selector to **H**. ② If beginning of song is cut off during program record play: 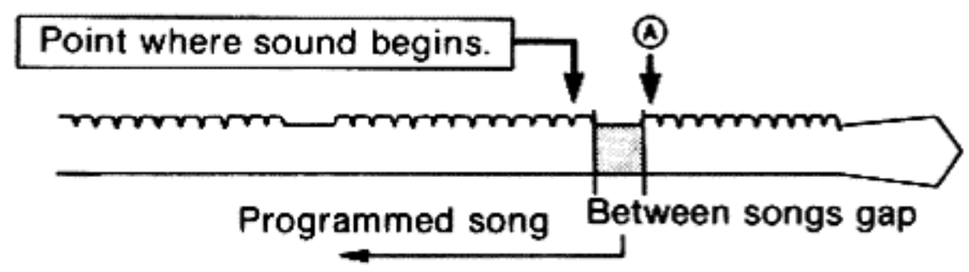 ③ Rotate knob in the **OUT** direction (to the right). 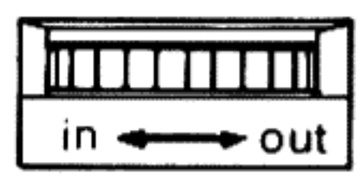 **Note:** Always return the sensitivity selector to **M** after completing the above adjustment.
Ⓒ **Tonearm lowered too far to the right** • No sound is heard for a long time (more than 30 seconds) after the stylus contacts the record. • The tonearm lowering position for the first song of a record cannot be adjusted. Adjustment is possible only for songs 2 through 8. • If between-songs gaps are extremely short or contain music and when an eccentric record is used, the problem cannot be corrected by this adjustment.	① Set sensitivity selector to **H**. ② If the end of the song before the programmed song is heard. 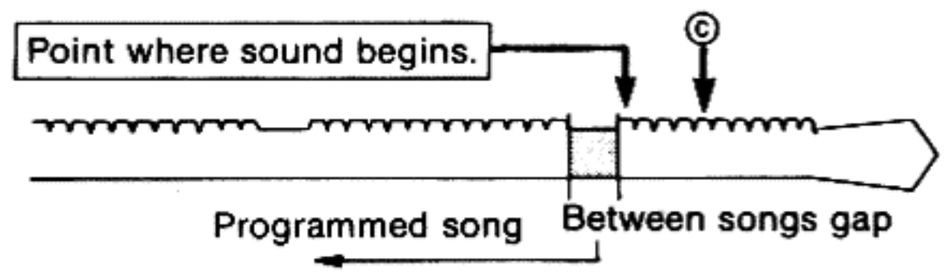 ③ Rotate knob in the **IN** direction (to the left). 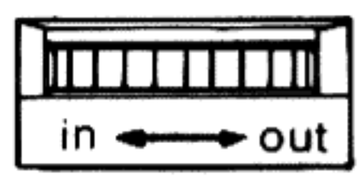 **Note:** Always return the sensitivity selector to **M** after completing the above adjustment.

2. Using the sensitivity selector

The between-songs detection function may not operate properly when using the following kinds of records:

A) Records having extremely short spaces between songs.

B) Records made at a very high recording level (highly modulated grooves).

In these cases, it may be necessary to change the sensitivity selector.

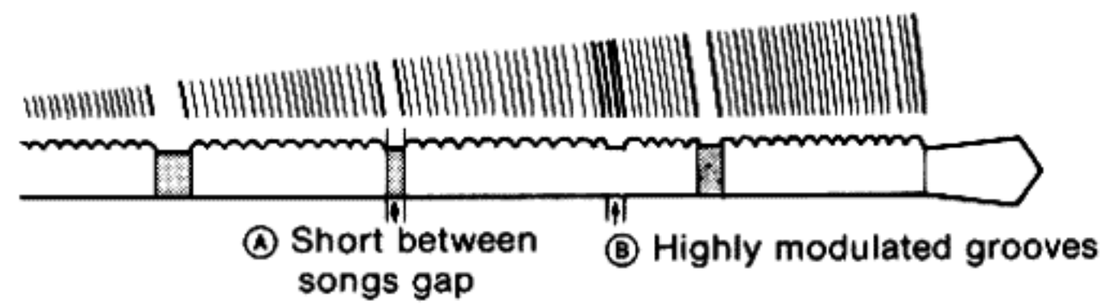

Problem	Confirmation/Adjustment
Short spaces between songs •Specified song is skipped over and the next song is played instead. •Tonearm lowers at beginning of specified song but no sound is heard.	•Set sensitivity selector to **H**. (If the beginning of the song is still not played correctly, adjust the stylus set-down adjustment knob.) sens L M H
Highly modulated grooves •Tonearm is lowered at point such as the one shown above. •Song before the specified song is played. (For example, song 4 is heard even though song 5 has been programmed.)	•Set sensitivity selector to **L**. **Notes:** •Always return the sensitivity selector to **M** before playing other records. •With some records, the problem will persist even after making the above adjustment. In this case, program record play, direct song selection and skip functions cannot be used. Play the record using the search function or automatic operation.

3. When playing non-standard records

Record type and problem	Operation and adjustment
•Records having very short between-songs gaps •Severely warped or eccentric records •Colored records •Very dusty and scratched records •30 cm (12") transparent or colored records and sono-sheets (including black records that allow some light to pass through or that have very reflective surfaces)	•Program record play, direct song selection, forward/backward skip and repeat play are not possible. •Set the record size selector to **manual** and use the search play function. size auto manual •Set the selector to **auto** for colored records having a diameter of 17 cm (7") and for standard records.
•17 cm (7") diameter 33 rpm records •30 cm (12") diameter 45 rpm records	Set the speed selector to the correct speed for the record to be played. speed 33 auto 45 •The speed selector should be left in the **auto** position at all other times.

■ MEASUREMENTS AND ADJUSTMENTS

- **Equipment used and condition of the set**

1. Oscilloscope
2. DC voltmeter
3. Record (SFTR007) for adjustment
4. Set the optical sensor sensitivity selector to "**M**".

Step	Item	Preparations	Parts adjusted	Procedure
1	**Start position**	1) Open the upper cabinet and put on the record. 2) Turn the power switch on. 3) Push the "start" switch.	Start position adjust screw. **(Fig. 1)**	1) Turn the start position adjusting screw. If it descends between tunes, turn the screw counterclockwise.
2	**Sensor gain**	1) Connect DC voltmeter to IC401 12-pin (+) and ground (−). 2) Put on the record for adjustment with side A up.	VR401 **(Fig. 2)**	1) Turn the power switch on. 2) Tonearm is on a between songs gap (blank area of the record). 3) Adjust VR401 so that the output voltage is 8.5±0.3V.
3	**Sensor resolution**	1) Connect the oscilloscope to the IC401 9-pin (+) and ground (−). 2) Put on the record for adjustment with side A up.	VR402 **(Fig. 2)**	1) Turn the power switch on. 2) Keep the F skip switch depressed to move the tonearm. (Output is delivered between the tunes.) 3) Adjust VR402 so that the peak output between tunes is 3V±0.3V. **(Fig. 3)**
4	**Stylus set-down position**	1) Connect lead wire with clip to CN301 6-pin to 2-pin of operation circuit board. (Muting operation stops.) 2) Open the upper cabinet and hold the reset switch with tape. 3) Put on the record for adjustment with side B up. 4) Close the upper cabinet. 5) Connect the unit to the amplifier (Connect the speakers to the speaker terminals.)	VR302 **(Fig. 4)**	1) Turn the power switch on. 2) Push the program key 2, followed by start switch. 3) After completion of cueing down, push the program key 2 for the purpose of skipping. 4) Make sure the descending at count "13". 5) Adjust VR302 so that the descending position is at count "13". **Note:** • VR302 can also be adjusted from the back of the set. **(Fig. 4 (B))**
5	**Tonearm offset angle**	1) Remove the dust cover. (Refer to "DISASSEMBLY INSTRUCTIONS.") 2) Open the upper cabinet and hold the reset switch with tape. 3) Close the upper cabinet. 4) Put on the record.	Adjusting screw **(Fig. 5)**	1) Turn the power switch on. 2) Keep the F skip switch depressed to move the tonearm. 3) Turn the adjusting screw so that the arm center matches the V-groove of the lift bar.
6	**Servo gain and offset voltage**	1) Remove the dust cover. (Refer to "DISASSEMBLY INSTRUCTIONS.") 2) Open the upper cabinet and hold the reset switch with tape. 3) Connect the DC voltmeter to CN301 5-pin (+) 2-pin (−). 4) Remove the sensor cover.	VR501 (Servo gain) **(Fig. 6)** Screw (Offset voltage) **(Fig. 6)**	1) Turn the power switch on. 2) Keep the F skip switch depressed to move the tonearm. 3) Open the upper cabinet. 4) Completely shift the tonearm to the left. Then, adjust VR501 so that the voltage is 6.0V (Servo gain). 5) Set the tonearm to the center and make sure that the output voltage is 3.0V. 6) If the voltage is not 3.0V, adjust screw so that the output voltage is 3.0V (Offset voltage).

• Adjustment points

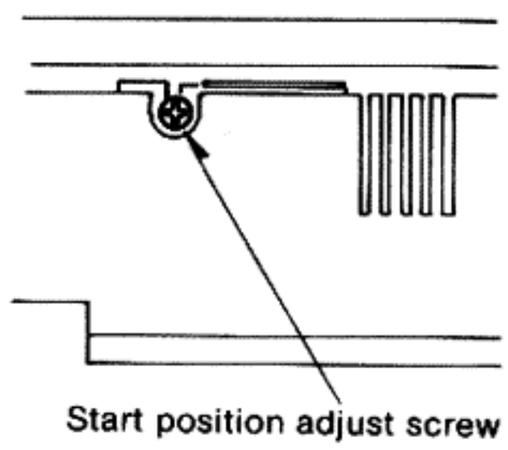

Fig. 1

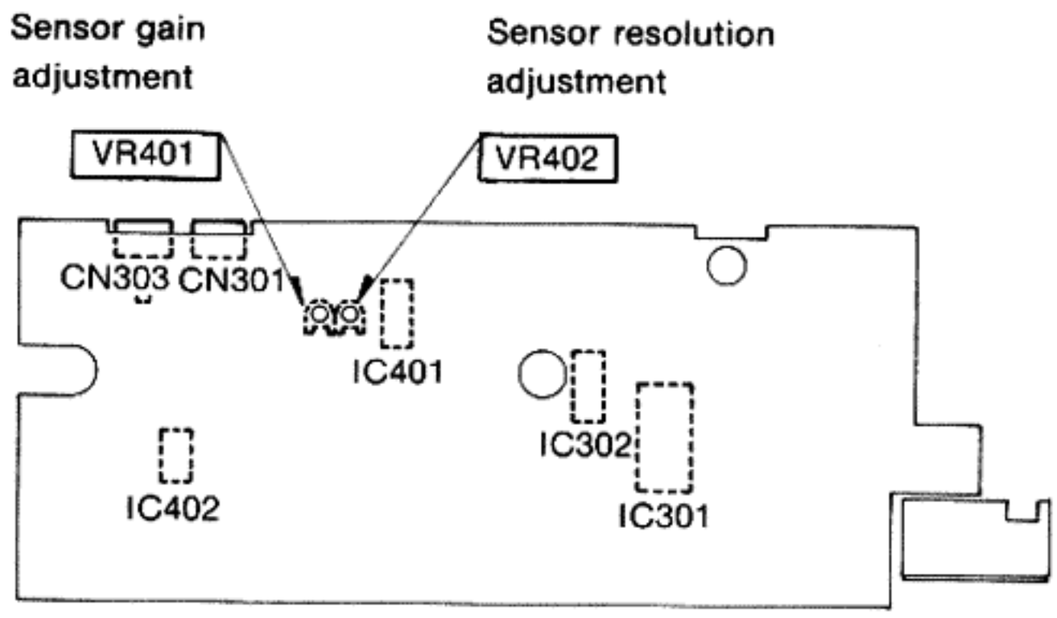

Fig. 2

Fig. 3

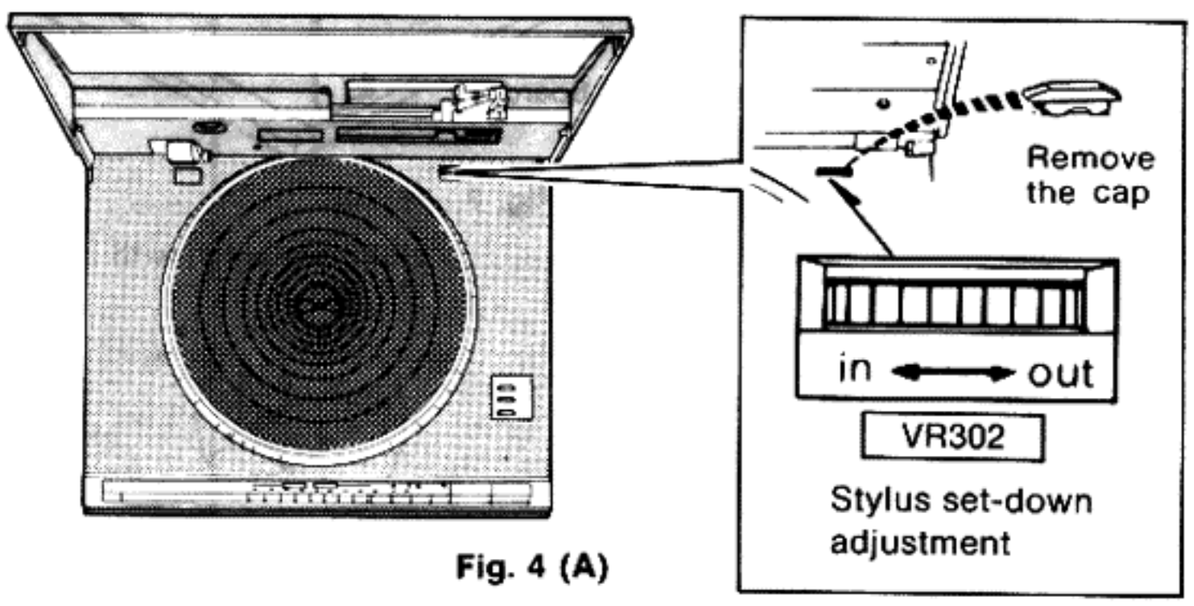

Fig. 4 (A)

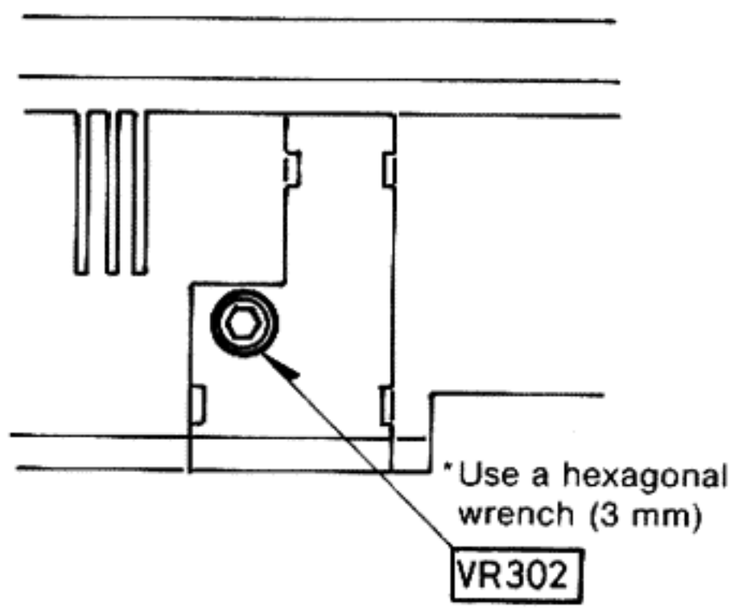

Fig. 4 (B)

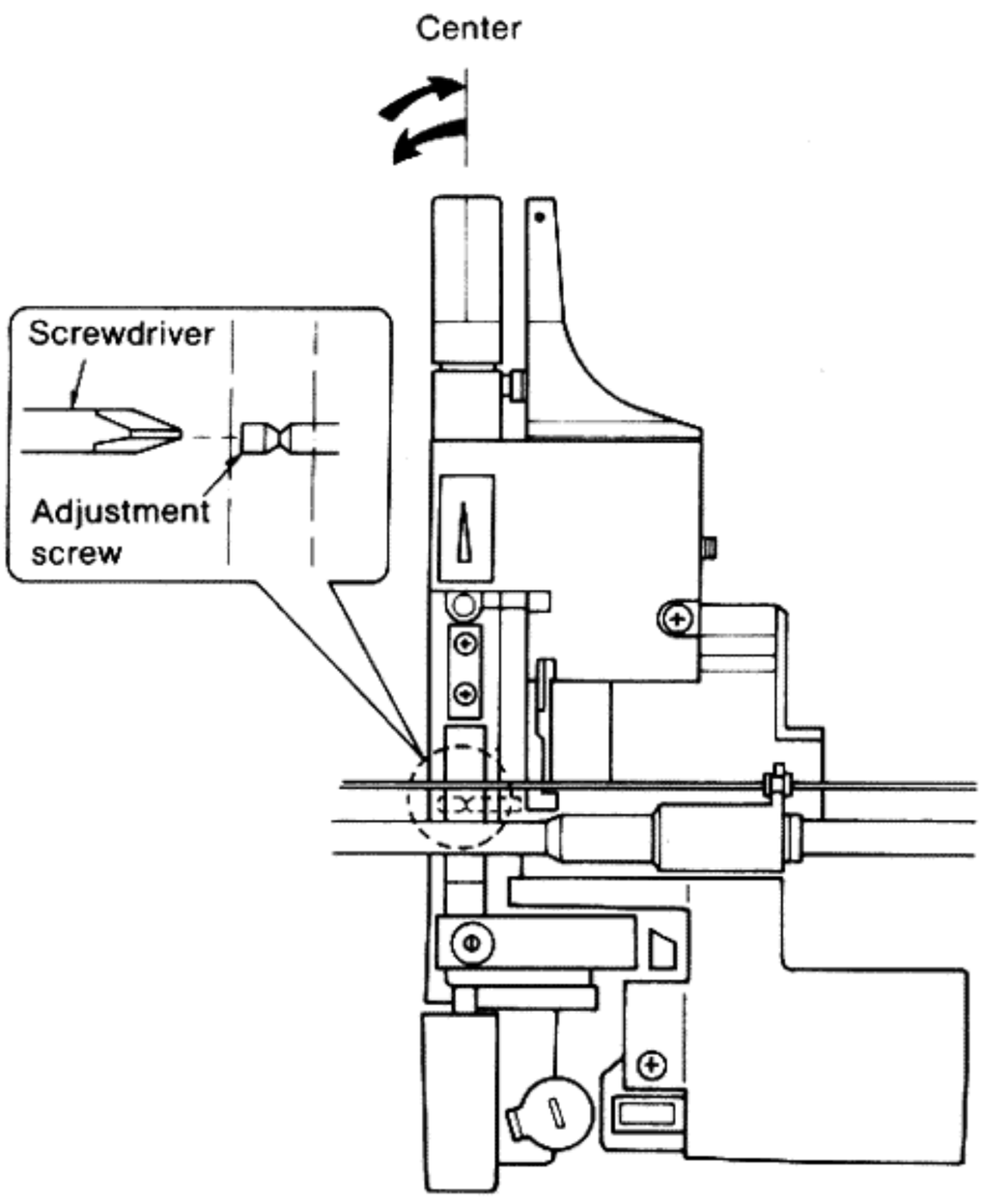

Fig. 5

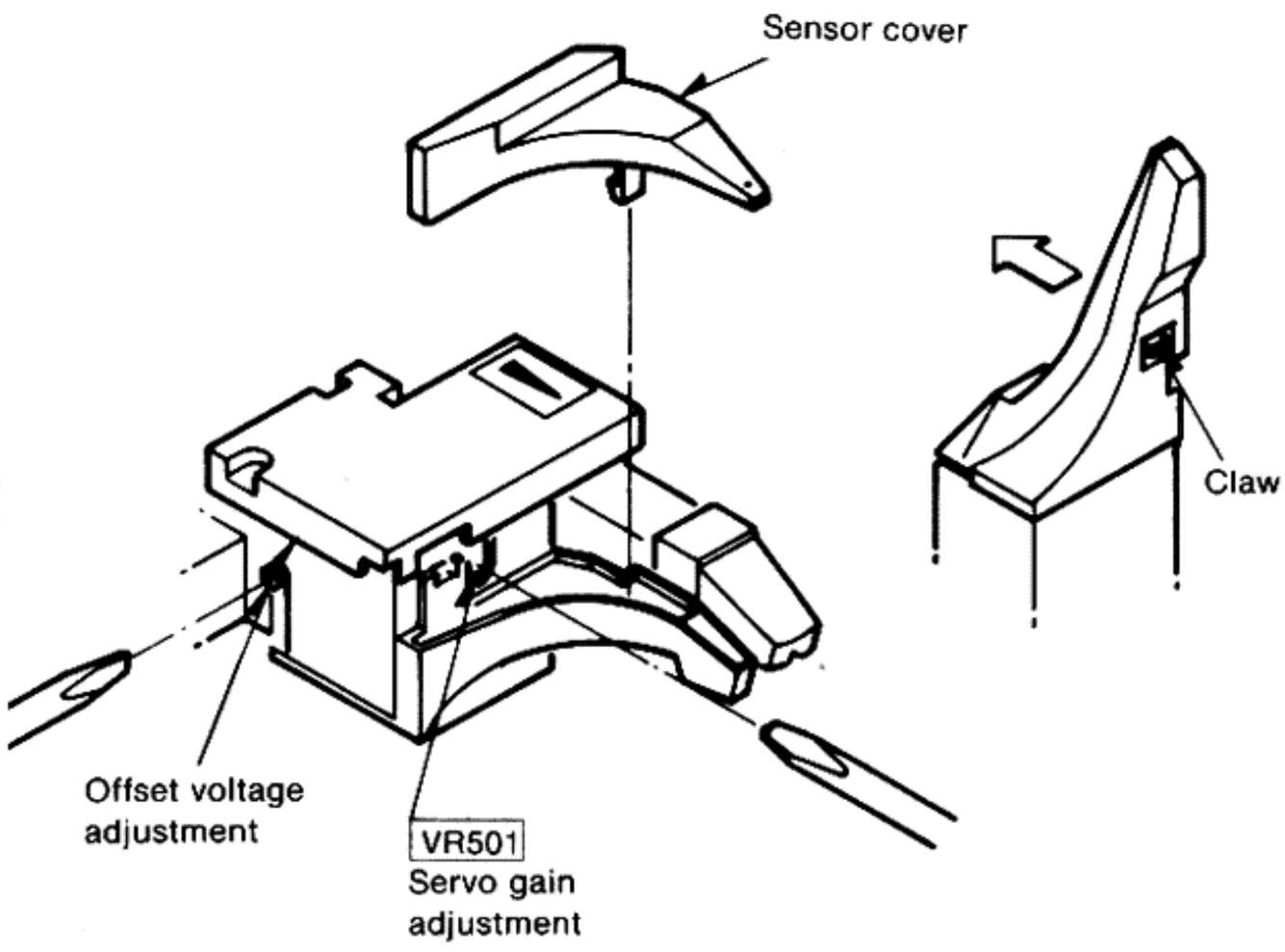

(Fig. 6)

■ TROUBLESHOOTING

1. How to use the repair table (Fig. 7)

① Remove the bottom board.
② Remove the operation circuit board and connect the P.C.B. ground terminal to the chassis (Stator frame.)
③ Put the unit on the repair table.
④ Fit the turntable platter and put on the turntable mat.
⑤ Put on the record and check the circuits from under the unit.

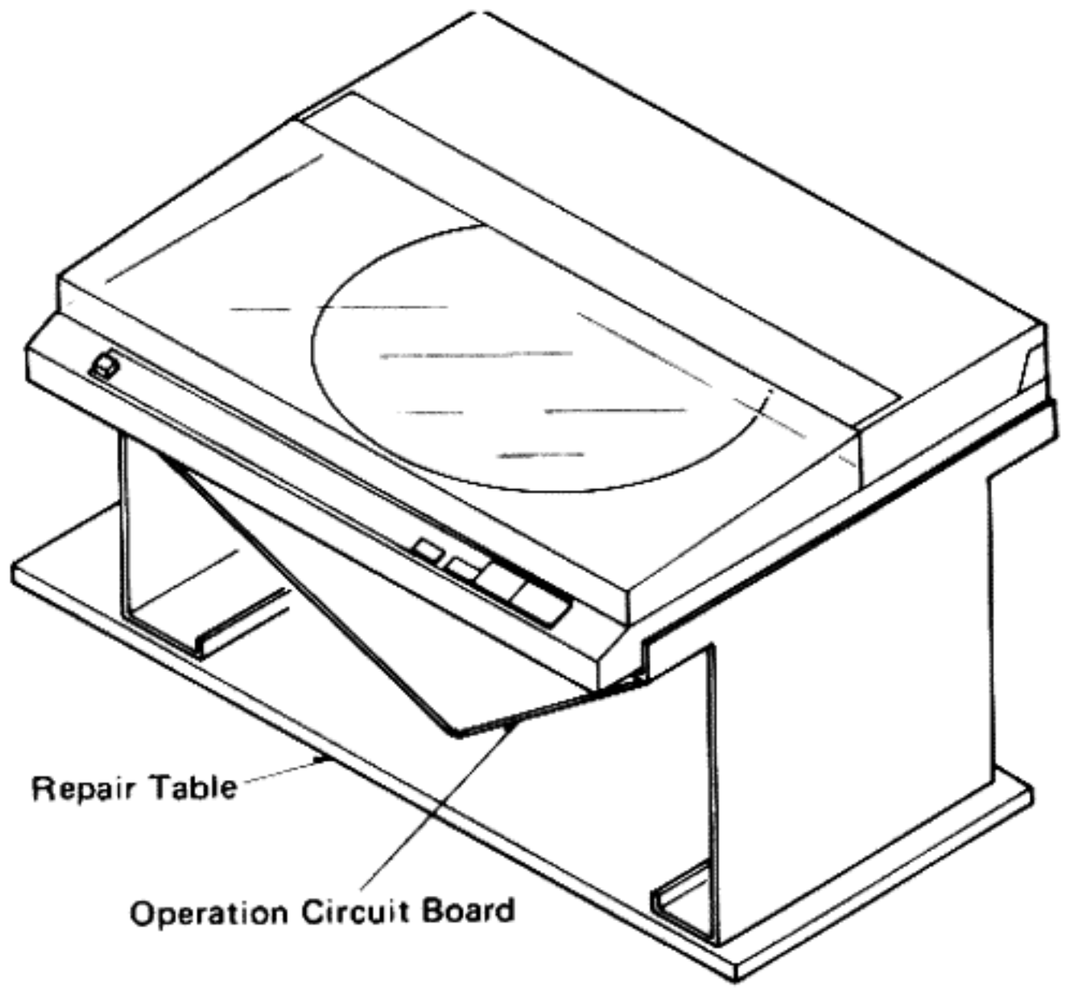

Fig. 7

2. How to raise the set (Fig. 8)

Note: Turntable platter is not fixed on the center spindle. Take care so that the turntable platter will not come loose. Also, take care allow the set to fall down.

① Remove the bottom board.
② Completely open the upper cabinet.
③ Hold the reset switch with the tape.
④ Fit the turntable platter.
⑤ Raise the unit and check the circuits.

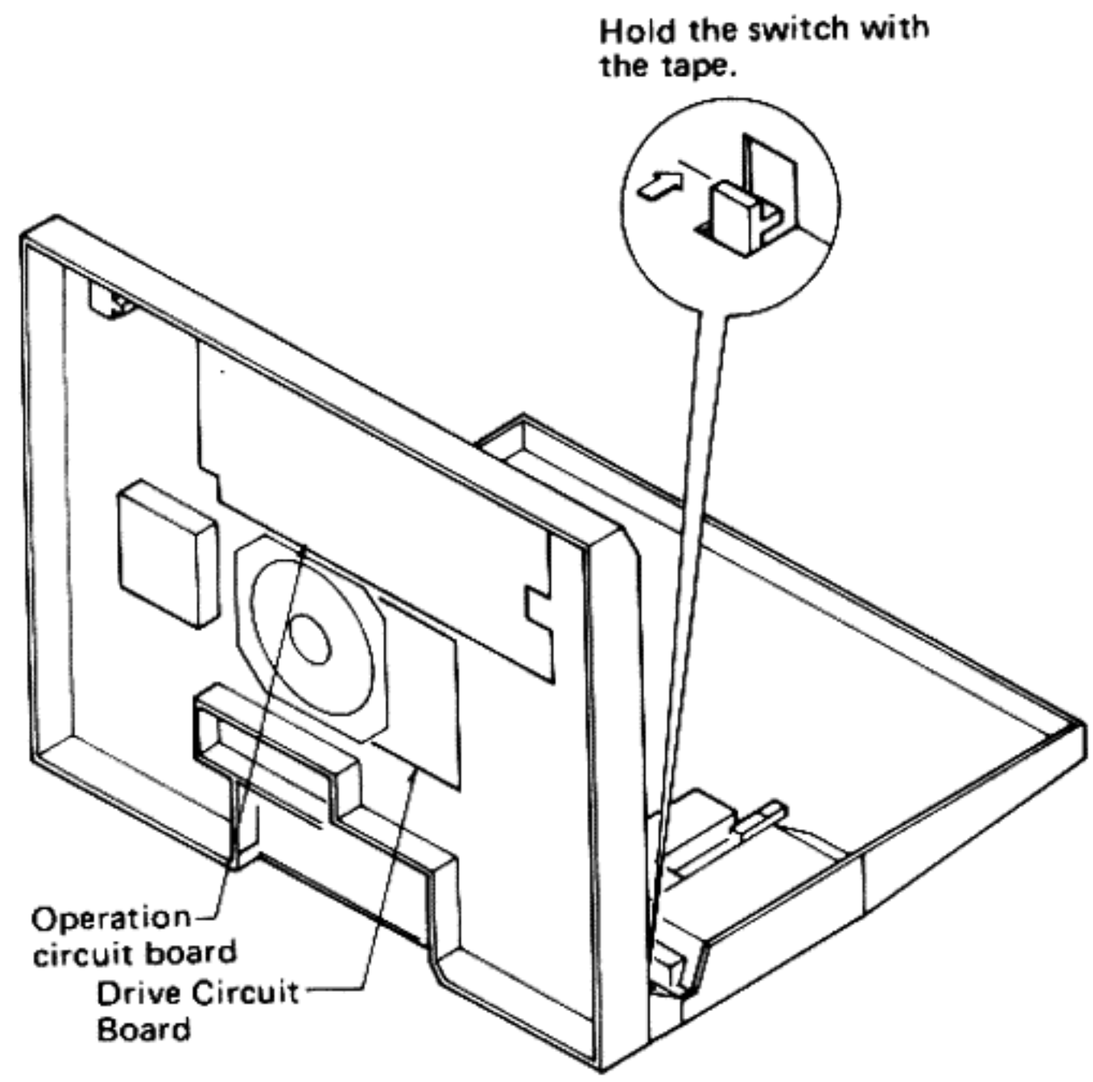

Fig. 8

3. How to turn over the set (Fig. 9)

Note: This purpose is to check the voltage of each circuit during stop of the turntable.

① Remove the turntable platter and turn over the unit.
② Remove the bottom board.
③ Turn the power switch "on" and check the voltage.

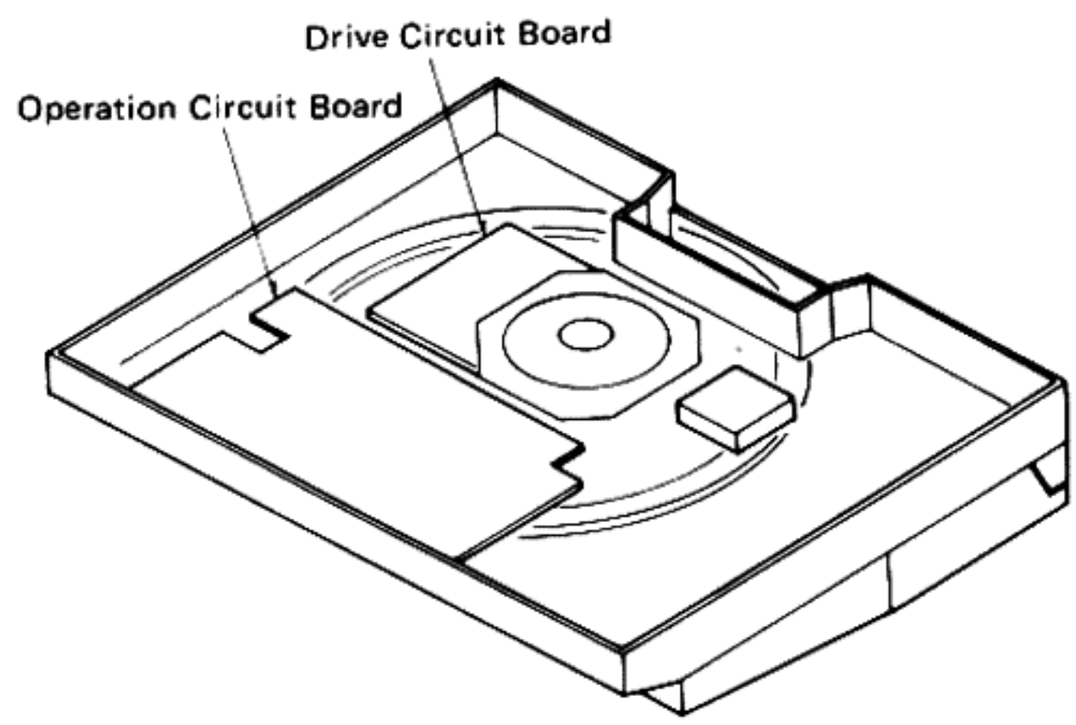

Fig. 9

Turntable does not rotate

Power source circuit
1. AC 17V between FC1 terminals ① and ②.
2. DC voltage of regulator IC (IC1)
   ① 19.3V, ② 0V, ③ 12V
3. DC voltage of regulator IC (IC2)
   ① 11.6V, ② 0V, ③ 5V

NO → AC cord, S1, T1, D6~D9, IC1, IC2, C1~C5 } defective

YES ↓

Clock frequency
1. Waveform of terminal ⑦ of IC402 — 1.8μs, 11V p-p
2. Waveform of terminal ① of IC402 — 5V, 1.8μs
3. Waveform of terminal ㊵ of IC301
   Waveform of terminal ㉘ of IC302 — 5V, 1.8μs

NO → X401, Q415, IC402, Q412, IC301, IC302 } defective

YES ↓

Key scan signal
1. Waveform of terminals ㉑ ~ ㉕ of IC301.
   Waveform of terminals ② and ⑫ of IC302. — 4.5V ~ 5V

NO → IC301, IC302, D313~320, S301~314, S701 } defective

YES ↓

*1
Check points in [ ] are common to all symptoms.

Push start switch (S302).

Power supply input terminal
1. DC voltage at terminal ① of IC101. (12V)
2. DC voltage at terminal ⑱ of IC201. (8.3V)

NO → IC101, IC201, R204, R208 } defective

YES ↓

Start/stop and brake circuit
1. DC voltage at terminal ㉛ of IC301. (0V), At stop 5V
2. DC voltage at terminal ⑩ of IC201. (0V), At stop 4.8V
3. DC voltage at terminal ⑫ of IC201. (0.6V), At stop 0V

NO → IC301, IC201, IC101, S302, C107 } defective

YES ↓

Drive coil and Hall element
1. Conduction check of drive coils. (About 33Ω)
2. DC voltage of Hall elements.
   ① 3.9V, ② 7.8V, ③ 3.9V, ④ 0V

NO → Drive coil, H101, 102, IC101 } defective

YES ↓

Drive circuit (Stop)
1. DC voltage at each terminal of IC101.

	②	③	④	⑤	⑥	⑦	⑧	⑨	⑩	⑪
Voltage	0V	12V	0V	0V	0V	0V	0V	0.2V	0.2V	6.5V

NO → IC101

YES ↓

Drive circuit (Rotation)
1. DC voltage at each terminal of IC101.

	②	③	⑨	⑩	⑪
Voltage	0.6V	12V	5V	5V	5V

2. Waveform between terminal
   ④ and ⑤ (⑥ and ⑦) of IC101 — 2.5V, 33rpm. 303ms

NO → IC101

Unsatable rotation

FG amplifier circuit
1. Conduction check of FG coil.
2. Waveform of terminal ⑮ of IC201

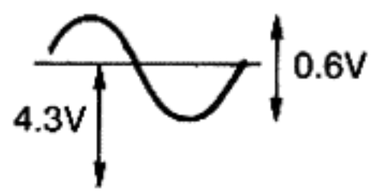

33rpm 20ms, 45rpm 14ms

NO → FG coil, IC201, R203, R205, C201~203 } defective

YES ↓

Quartz oscillator circuit
1. Waveforms of terminals ③ and ④ of IC201.

Terminal ③

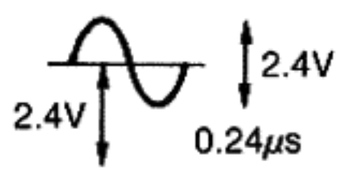

Terminal ④

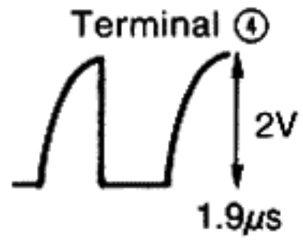

NO → X201, IC201, C204~206 } defective

YES ↓

Speed and phase control circuit
1. Waveform of terminal ⑭ of IC201

• Stable • Slow • Fast

33rpm 20ms (50.5 Hz)

2. Waveform of terminal ⑬ of IC201

• In-phase • Phase lag • Phase lead

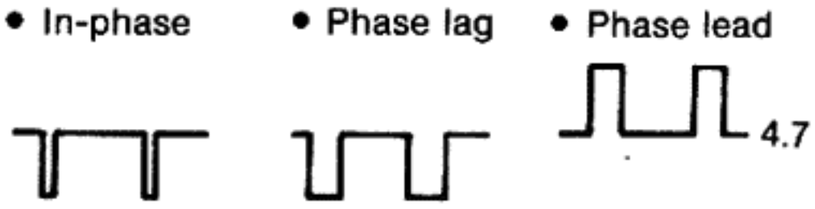

33rpm 10ms (101 Hz)

NO → IC201, IC101 } defective

Arm motor does not rotate

Motor control circuit
1. DC voltage at each terminal of IC302

	⑰	⑯	⑱
Stop	1.5V	1.5V	0V
Lead-in	0.1V	1.5V	5V
Return	1.5V	0.1V	5V

2. DC voltage at each terminal of IC401

	①	⑯	③
Stop	0V	0V	0V
Lead-in	6.5V	0.4V	6.8V
Return	0.4V	6.5V	6.8V

NO → IC302, IC401, Arm motor } defective

Cueing down/ up does not work

Cueing control circuit
1. DC voltage at terminals ④ and ⑮ of IC302
   Terminal ④.....Only during cueing down (1.6V)
   Terminal ⑮.....During cueing and down (0.8V)
2. DC voltage of Q302 of collector

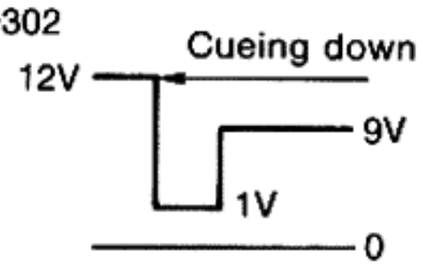

NO → IC301, IC302, Q301, Q302, Cueing plunger } defective

■ EXPLODED VIEW

• **Cabinet and chassis parts**

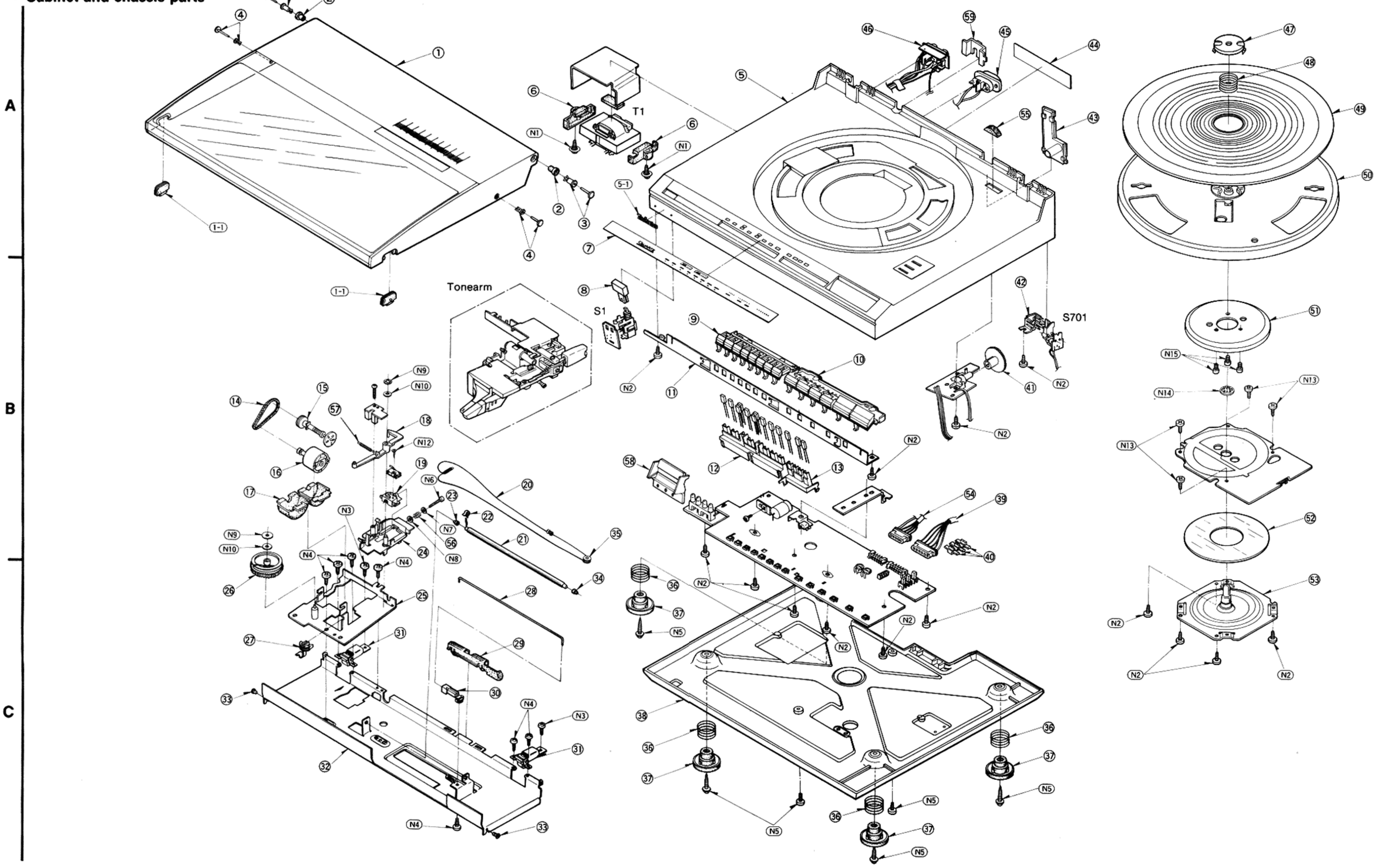

A	(1-1) (4) (3) (2) (1) (4)(6) (2)(3)(7) (5-1) (6) (5) (46) (59) (45) (55) (43)(44) (47) (48) (49)(50)
B	(14) (17) (16) (15)(57)(1-1) (19)(18)(24)(23)(56) (22)(21)(20) (8) (35)(58) (11) (9) (12) (13)(10) (54)(40)(39) (42)(41) (51)(52)
C	(33)(26)(27) (32) (31)(25) (30) (29)(28)(33) (31) (34) (38)(37)(36)(36)(37) (36) (37) (36)(37) (53)

- **Tonearm parts**

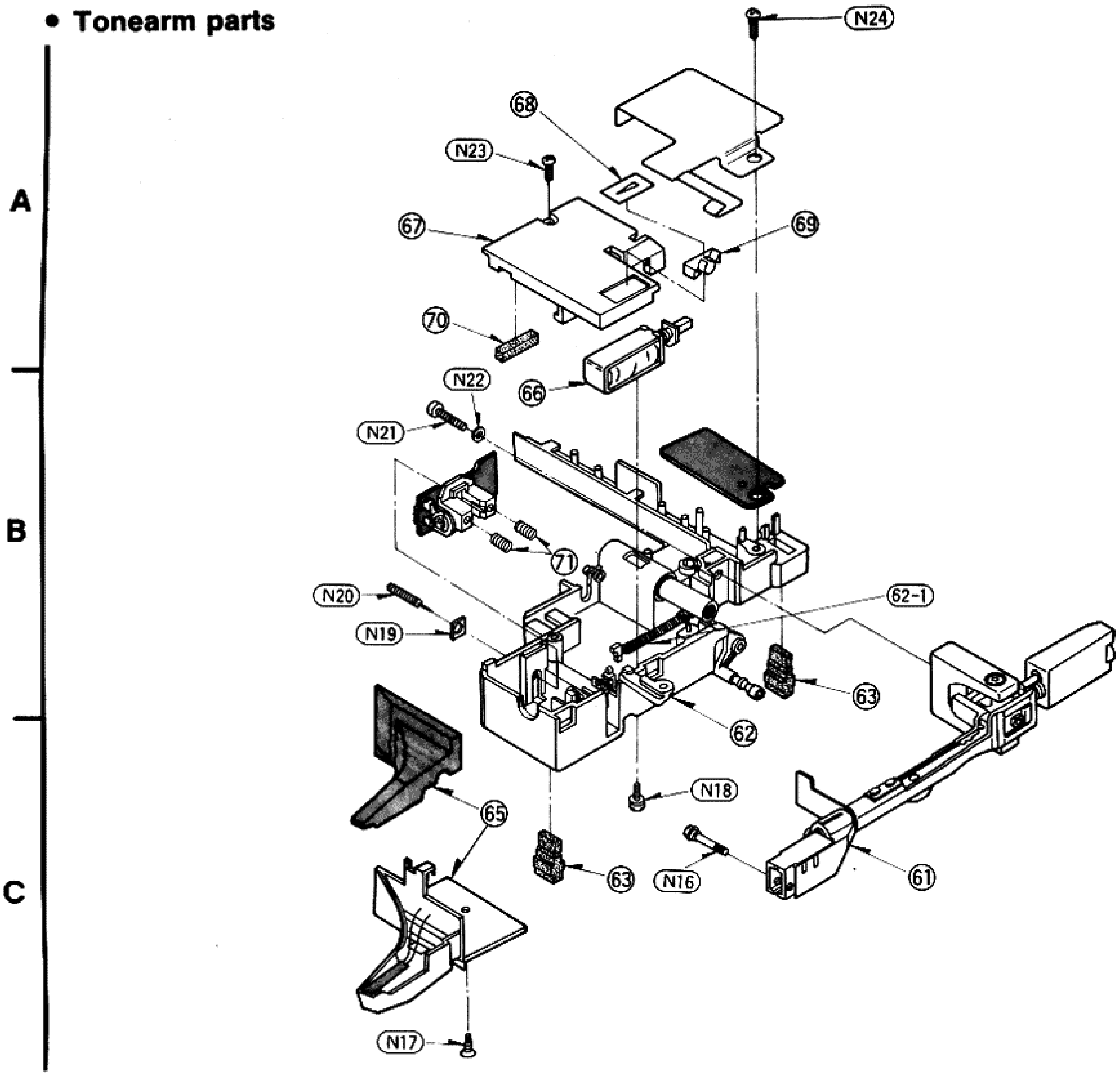

A	67 70 68 69
B	66 71 63 62-1
C	65 63 62 61

■ REPLACEMENT PARTS LIST

Notes:
1. Part numbers are indicated on most mechanical parts. Please use this part number for parts orders.
2. Important safety notice:
   Components identified by a ⚠ mark have special characteristics important for safety.
   When replacing any of these components, use only manufacturer's specified parts.
3. Bracketed indications in Ref. No. columns specify the area. Parts without these indications can be used for all areas.
4. The "Ⓢ" mark is service standard parts and may differ from production parts.
5. The parenthesized numbers in the columns of description stand for the quantity per set.

Area

[M]........ U.S.A.
[MC]...... Canada

Ref. No.	Part. No.	Description
INTEGRATED CIRCUITS		
IC1	AN7812	Regulator
IC2	AN78N05	Regulator
IC101	AN6638	Turntable Drive
IC201	AN6683	Turntable Control
IC301	MN1425FPT	Micro Computer
IC302	MN1402FPM	Micro Computer
IC401	AN6690	Arm Motor Drive & Blank Groove Detector
IC402	AN6912	Comparator
IC951	AN6914	Comparator

Ref. No.	Part. No.	Description
TRANSISTORS		
Q301, 304, 364, 402, 951	2SD636	Switching
Q302, 303	2SD892	Switching
Q306, 311, 412, 952, 953	2SB641	Switching
Q401, 411, 413	UN1111	Switching
Q415	2SC2206	OSC
Q430	2SD638	Regulator

Ref. No.	Part. No.	Description
DIODES		
D2~5	SVDAY5525S	LED
D6~9	⚠ SVD1SR35200V	Rectifier
D301, 302, 343	SVDGL-9PG2	LED
D303~311, 342	SVDGL-9HY82	LED
D312	MA4062	6.2V Zener
D313~319, 321~323, 347, 430, 431, 951 952	MA165	Switching

Ref. No.	Part. No.	Description
D401	MA4068	6.8V Zener
D402	MA4110	11V Zener
D501, 701	Ⓢ MA162A	Switching
D502	SVDSLV31VC3	LED
CRYSTAL		
X201	SVQSH41TR	4.1931 MHz
CERAMIC OSC		
X401	SVFCSB540P3	540 kHz
VARIABLE RESISTORS		
VR302	EVJE1AF20B54	Stylus Set-down Position Control, 50 kΩ(B)
VR401	EVN61AA00B55	Sensor Gain Adjustment, 500kΩ(B)
VR402	EVN61AA00B25	Sensor Resolution Adjustment, 200kΩ(B)
VR501	EVNK0AA00B14	Servo Gain Adjustment, 10kΩ(B)
RELAY		
RL701	SFDYQ11N02	Muting
SWITCHES		
S1	⚠ SFDSC02N02	Power
S301~314	EVQQS405K	Operation
S315, 317	SFDSHSW08314	Speed and Size Selector
S316	SFDSHSW08315	Sens Selector
S601	SFDSC02N03	Rest
S701	SFDSC05N01	Reset
PHOTO INTERRUPTERS		
PC501	0N1186	Offset Angle Sensor
PC502	SFPABJ0205R	Blank Groove Sensor
PC601	0N1161	Tonearm Position Sensor
HALL ELEMENT		
H101, 102	0H-002	Turntable Position Detector
POWER TRANSFORMER		
T1 [M]	⚠ SLT57DTL2A	Power Source
T1 [MC]	⚠ SLT57DTS18C	Power Source
FUSE		
F1 [MC] only	⚠ XBA1F10NU14	250V, 1A
CABINET AND CHASSIS PARTS		
1	SFADC13M01E	Dust Cover (1)
1-1	SFGZJ02N01	Rubber Cushion (2)
2	SFGZC02N01	Rubber Cushion (2)
3	SFUMC02N14	Latch, Dust Cover (2)
4	SFUMQ06N22	Latch, Dust Cover (2)
5	SFACC13N01E	Cabinet (1)
5-1	SFKBBD2N01	Badge (1)
6	SFGCQ06X01	Rubber Cushion, Transformer (2)
7	SFKKC13N01	Ornament (1)

Ref. No.	Part. No.	Description
8	SRKTK15N26	Knob, Power (1)
9	SFKTC13N02	Knob, Program (1)
10	SFKTC13N01	Knob, Operation (1)
11	SFUPC13N01	Guide (1)
12	SFUMC13N02	Holder (B) (1)
13	SFUMC13N01	Holder (A) (1)
14	SFGBC10-01	Belt (1)
15	SFUMQ06N06A	Worm Ass'y (1)
16	SFMHC02N02R	Motor, (With Capstan) (1)
17	SFUMC02N07	Rubber Cushion (1)
18	SFUMC02N05	Lever, Switch (1)
19	SFUMQ06N09	Holder, Rest Switch (1)
20	SFUZC05N02E	Rope Ass'y (1)
21	SFXJC02N03	Guide, Rail (1)
22	SFUMQ06N07	Clamper, Guide Rail (1)
23	SFGCQ06N01	Rubber, Cushion (1)
24	SFUMC02N06	Base, Rest Switch (1)
25	SFUPBL3N11E	Base, Motor (1)
26	SFUML11R03	Wheel, Tonearm Drive (1)
27	SFUMC02N10	Holder, Lead Wire (1)
28	SFUZC02N01	Rod, Rest Switch (1)
29	SFUMC02N12	Holder, Lead Wire (1)
30	SFUMV05N23	Cap (1)
31	SFATQ06N01E	Hinge (2)
32	SFUKC13N01E	Base, Tonearm (1)
33	SFGZBL3N03	Rubber Cushion (1)
34	SFGCC05N05	Rubber Cushion, Guide Rail (1)
35	SFUMC05N22	Pulley (1)
36	SFQCC05N01	Spring, Insulator (4)
37	SFGAJ02N01	Insulator (4)
38	SFAUC13N01	Bottom Cover (1)
39	SFEHJ02N02E	Phono Output Cord (1)
40	SFKTQ06N01	Knob, Selector (3)
41	SFKTQ06N02	Knob, Tonearm Down Adjuster (1)
42	SFUMJ02N14	Cover, Rest Switch (1)
43	SFACC13N011	Cover (1)
44 [M]	SFNNC13M01	Name Plate (1)
44 [MC]	SFNNC13C01	Name Plate (1)
45	⚠ SFDJHSC0491	AC Socket (1)
46	SFDJJ02N04E	Jack, Phono Output (1)
47	SFWEC06N01	45 rpm Adaptor (1)
48	SFQAC06N01	Spring, 45 rpm Adaptor (1)
49	SFTGQ06N01	Turntable Mat (1)
50	SFTEQ05N01	Turntable Platter (1)
51	SFTMC07-01E	Magnet (1)
52	SFMGQ34N01	Cover, Coil (1)
53	SFMZC06N01R	Stator Flame Ass'y (1)
54	SFDJC13N03E	Connector, Ass'y (1)
55	SFGKQ06N01	Cap (1)
56	SFQA913-01	Spring (1)
57	SFQHQ34N22	Spring (1)
58	SFUMC13N03	Prism (1)
59	SFACC13N012	Cover (1)

Ref. No.	Part. No.	Description
TONEARM PARTS		
61	SFPAMJ0201A	Tonearm Ass'y (1)
62	SFPKDJ0201R	Tonearm Base (1)
62-1	SFPSP00504	Spring (1)
63	SFPGML1101	Rubber, Tonearm Guide (2)
65	SFPABJ0205R	Sensor Ass'y (1)
66	SFDZC05N01E	Solenoid Ass'y (1)
67	SFPCS0Q601	Cover, Indicator (1)
68	SFPAK0Q601	Plate, Indicator (1)
69	SFPCSJ0201	Holder, LED (1)
70	SFPGM0Q601	Rubber, LED (1)
71	SFPSP00302	Spring, Adjustor (2)
SCREWS, WASHERS AND NUTS		
N1	SFXGQ06N01	Screw (2)
N2	Ⓢ XTV3+10BFN	Screw, ⊕3×10 (11)
N3	XTW3+14TFZ	Screw, ⊕3×14 (2)
N4	XTV3+6JFZ	Screw, ⊕3×6 (4)
N5	XTW3+14QFYR	Screw, ⊕3×14 (6)
N6	XSN3+30S	Screw, ⊕3×30 (1)
N7	XWE3D10	Washer, φ3 (1)
N8	XNC3HS	Nut (1)
N9	CSTW3	Washer (2)
N10	XWE3A8BW	Washer (1)
N11	XTV3+20J	Screw, ⊕3×20 (1)
N12	XTN16+10G	Screw, ⊕16×10 (1)
N13	Ⓢ XTV3+6BFN	Screw, ⊕3×6 (4)
N14	SFXWC06N02	Washer (1)
N15	Ⓢ XSN3+5S	Screw (3)
N16	SFPEV0Q601	Screw, Cartridge (1)
N17	XTS26+6JFZ	Screw, ⊕2.6×6 (1)
N18	XYN2+C4FZ	Screw, ⊕2×4 (1)
N19	SFXN623-1	Nut (1)
N20	SFPTN00301	Screw (1)
N21	Ⓢ XSN3+12S	Screw, ⊕3×12 (1)
N22	Ⓢ XWA3B	Washer (1)
N23	XTN23+6JFZ	Screw, ⊕2.3×6 (1)
ACCESSORIES		
A1 [M]	SFNUC13M01	Instruction Book (1)
A1 [MC]	SFNUC13C01E	Instruction Book (1)
A2	SFDHC05N01	Phono Output Cord (1)
A3	SFDLJ02N11E	Ground Wire (1)
A4	⚠ SFDAC05M01	AC Cord (1)
PACKING PARTS		
P1 [M]	SFHPC13M01	Carton Box (1)
P1 [MC]	SFHPC13C01	Carton Box (1)
P2	SFHHC13N01	Pad, Front (1)
P3	SFHHC13N02	Pad, Rear (1)
P4	SFHKC05N01	Clamper, Turntable Platter (2)
P5	SFHKQ06N01	Spacer, Tonearm (1)
P6	SFHSC13N01	Spacer, Dust Cover (1)
P7	SFYH60×60	Polyethylene Bag (1)
P8	SFYH17×16	Polyethylene, Cord (1)
P9	SFYF32A35	Polyethylene, Turntable Mat (1)
P10	SFHDD04N01	Pad, Turntable Mat (1)

■ RESISTORS AND CAPACITORS

Notes:
1. Part numbers are indicated on most mechanical parts. Please use this part number for parts orders.
2. Important safety notice: Components identified by ⚠ mark have special characteristics important for safety. When replacing any of these components use only manufacturer's specified parts.
3. This "Ⓢ" mark is service standard parts and may differ from production parts.
4. Unless otherwise specified. All resistors are in OHMS (Ω) K = 1000Ω, M = 1000kΩ All capacitors are in MICROFARADS(μF), P = 10^{-6} μF.

Numbering System of Resistor

Example

ERD	25	F	J	101
Type	Wattage	Shape	Tolerance	Value
ERG	1	AN	J	2R2
Type	Wattage	Shape	Tolerance	Value

Resistor Type	Wattage	Tolerance
ERD : Carbon	S2 : 1/4W	F : ±1%
ERG : Metal Oxide	25 : 1/4W	J : ±5%
ERX : Metal Film	1 : 1W	G : ±2%
	2 : 2W	

ERD2FCG□□□ ⟶ Fuse type carbon (1/4W)
ERDS2TJ□□□ ⟶ Small type carbon (1/4W)

Numbering System of Capacitor

Example

ECKD	1H	102	Z	F
Type	Voltage	Value	Tolerance	Peculiarity
ECEA	50	M	R47	R
Type	Voltage	Peculiarity use	Value	Special use

Capacitor Type		Voltage		Tolerance
		ECEA Type	Others	
ECEA	: Electrolytic	1A : 10V	1H : 50V DC	J : ±5%
ECKD	: Ceramic	1C : 16V	2H : 500V DC	K : ±10%
ECQM	: Polyester	1E : 25V	1 : 100V	Z : +80%, −20%
ECCD	: Ceramic	1V : 35V		P : +100%, −0%
ECKD	: Ceramic	1H : 50V		M : ±20%
ECEB	: Electrolytic	1J : 63V		
ECFR	: Ceramic	50 : 50V		
ECFB	: Ceramic			

Ref. No.	Part No.	Value
RESISTORS		
R3	ERG2SJ101	100
R4	ERDS2TJ271	270
R103	ERDS2TJ104	100K
R104	ERX1ANJ2R7	2.7
R105	ERDS2TJ270	27
R201	ERDS2TJ273	27K
R202	ERDS2TJ394	390K
R203	ERDS2TJ680	68
R204	ERDS2TJ151	150
R205	ERDS2TJ223	22K
R207	ERDS2TJ102	1K
R208	ERDS2TJ680	68
R301, 302	ERDS2TJ471	470
R303, 304	ERDS2TJ471	470
R305, 306	ERDS2TJ471	470
R307, 308	ERDS2TJ471	470
R309, 310	ERDS2TJ471	470
R311	ERDS2TJ471	470
R312	ERDS2TJ223	22K
R313	ERDS2TJ123	12K
R314	ERDS2TJ332	3.3K
R318, 319	ERDS2TJ333	33K
R321	ERDS2TJ102	1K
R324	ERDS2TJ821	820
R325	ERDS2TJ101	100
R326	ERDS2TJ271	270
R327	ERDS2TJ101	100
R332	ERDS2TJ103	10K
R333	ERDS2TJ101	100
R335, 336	ERDS2TJ332	3.3K
R337, 338	ERDS2TJ332	3.3K
R341, 342	ERDS2TJ332	3.3K
R343, 344	ERDS2TJ103	10K
R346, 347	ERDS2TJ563	56K
R348	ERDS2TJ562	5.6K
R349, 350	ERDS2TJ272	2.7K

Ref. No.	Part No.	Value
R351	ERDS2TJ103	10K
R352	ERDS2TJ101	100
R353	ERDS2TJ222	2.2K
R354	ERDS2TJ333	33K
R355, 356	ERDS2TJ101	100
R381	ERDS2TJ331	330
R383	ERDS2TJ331	330
R385	ERDS2TJ152	1.5K
R386	ERDS2TJ154	150K
R387	ERDS2TJ102	1K
R389, 390	ERDS2TJ223	22K
R393, 394	ERDS2TJ333	33K
R396	ERDS2TJ471	470
R397	ERDS2TJ122	1.2K
R398	ERDS2TJ153	15K
R401	ERDS2TJ103	10K
R402, 403	ERDS2TJ123	12K
R404, 405	ERDS2TJ474	470K
R406	ERDS2TJ104	100K
R407	ERDS2TJ122	1.2K
R408	ERDS2TJ271	270
R409	ERDS2TJ473	47K
R410	ERDS2TJ102	1K
R412	ERDS2TJ222	2.2K
R413	ERDS2TJ821	820
R414	ERDS2TJ561	560
R415	ERDS2TJ271	270
R416	ERDS2TJ153	15K
R417	ERDS2TJ224	220K
R418, 419	ERDS2TJ333	33K
R420	ERDS2TJ103	10K
R421, 422	ERDS2TJ333	33K
R423	ERDS2TJ563	56K
R424	ERDS2TJ224	220K
R425	ERDS2TJ393	39K
R426	ERDS2TJ153	15K
R427	ERDS2TJ224	220K

Ref. No.	Part No.	Value
R428	ERDS2TJ392	3.9K
R430	ERDS2TJ562	5.6K
R431	ERDS2TJ563	56K
R432	ERDS2TJ154	150K
R433	ERDS2TJ471	470
R434, 435	ERG1SJ390	39
R436	ERDS2TJ471	470
R437	ERDS2TJ5R6	5.6
R501 Ⓢ	ERD25FJ391	390
R502 Ⓢ	ERD25FJ271	270
R503 Ⓢ	ERD25FJ471	470
R951	ERDS2TJ823	82K
R952	ERDS2TJ103	10K
R953	ERDS2TJ272	2.7K
R954	ERDS2TJ274	270K
R955	ERDS2TJ472	4.7K
R956	ERDS2TJ563	56K
R957	ERDS2TJ683	68K
RF1 ⚠	ERD2FCG120	12

Ref. No.	Part No.	Value
CAPACITORS		
C1, 2 ⚠	ECQG1223KZ	0.022
C3 ⚠	ECQG1223KZ	0.022
C4	ECEB1EU222	2200
C5	ECEA1CU330	33
C6	ECEA0JU470	47
C101	ECEA1CU330	33
C102 Ⓢ	ECEA50ZR22	0.22
C103	ECQV05274JZ	0.27
C105, 106 ⚠	ECEA1AN470S	47
C107	ECEA1HU010	1
C201	ECEA0JU470	47
C202 Ⓢ	ECEA50ZR22	0.22
C203	ECQM1H683KV	0.068
C204	ECCD1H121J	120P
C205	ECCD1H330JC	33P
C206	ECCD1H121J	120P
C207	ECEA0JU470	47
C208	ECEA1AU221	220
C302	ECEA1EU4R7	4.7
C305	ECFR1E104ZFM	0.1
C310, 311	ECFR1E104ZFM	0.1
C320	ECFR1E104ZFM	0.1
C401	ECEA1HUR47	0.47
C402 ⚠	ECEA1CN100	10
C403, 404	ECQG1H473KZ	0.047
C405	ECEA1CU100	10
C411, 412	ECQG1H104KZT	0.1
C413	ECFR1E104ZFM	0.1
C414	ECCD1H181J	180P
C415	ECQG1H682KZ	0.0068
C601	ECFB1B104ZM	0.1
C701	ECEA1CU101	100
C951	ECEA1HU010	1
C952	ECEA1CU101	100
C953	ECEA0JU101	100

■ HOW TO REPLACE CHIPS

(Resistor, capacitor and jumper)

- **Removing procedure**

1. Completely remove the solder from both ends of the chip by use of solder suker.
2. Touch the soldering iron to the end of the chip as shown in Fig. **A** , then turn the tweezers in the direction of the arrow.

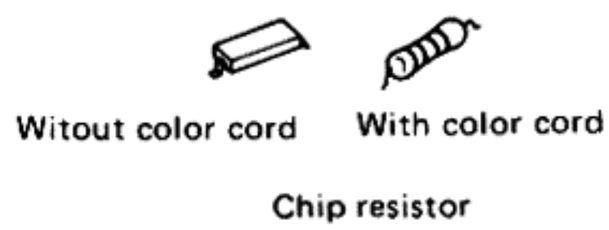

Do not re-use chip resistor or capacitor without color cord.

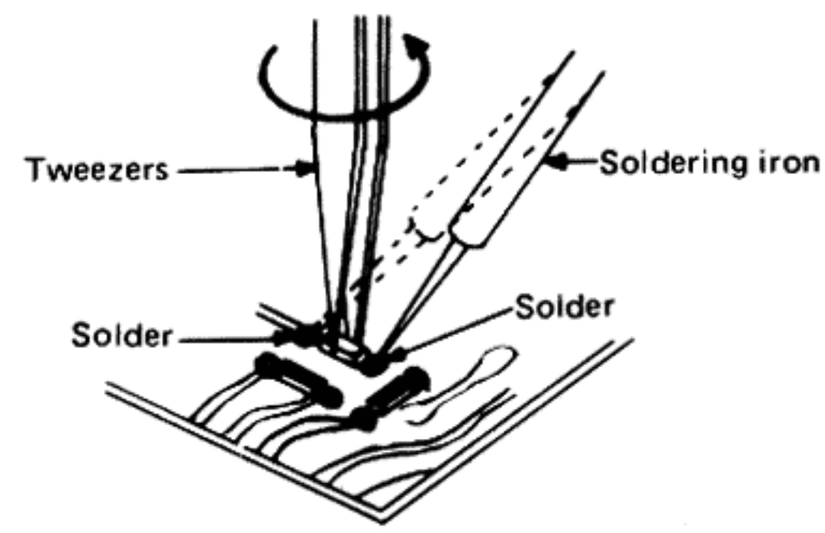

Fig. A

- **Replacing procedure**

1. Place solder on the foil where the chip is fitted.
   Then solder the chip by holding the soldering iron as shown in Fig. **B** .

Note:

1. If the chip jumper is removed, connect a coated lead wire to the part. (See Fig. **C**).
   Chip jumper is marked with "J" on the printed circuit board.

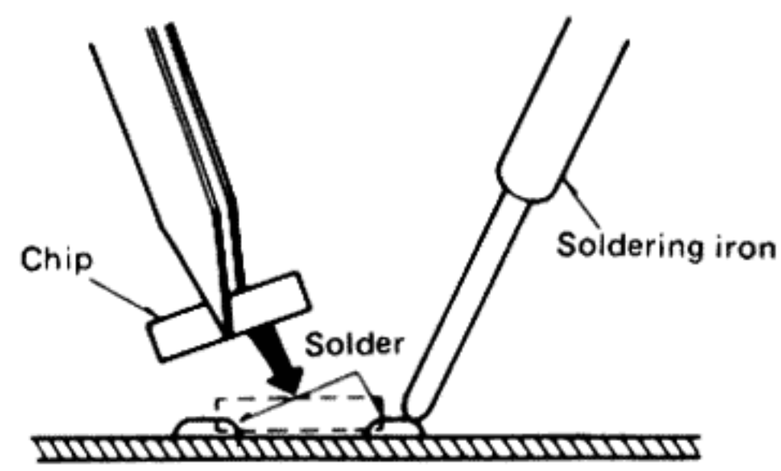

Fig. B

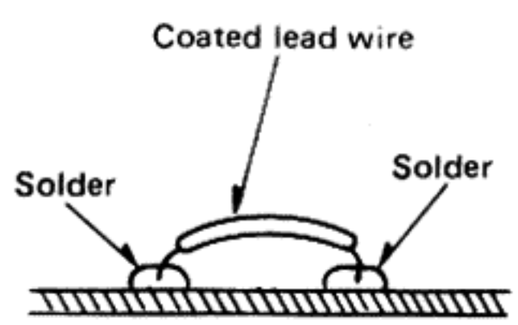

Fig. C

- **Note for replacing chips**

1. Do not heat the chip more than 3 seconds.
2. Do not rub the electrode against the chip.
3. Use the tweezers with care not to damage the surface of the chip.
4. It is desirable to use a pencil type soldering iron. And use soldering iron less than 60W.

- **Terminal guide of transistors, and IC's.**

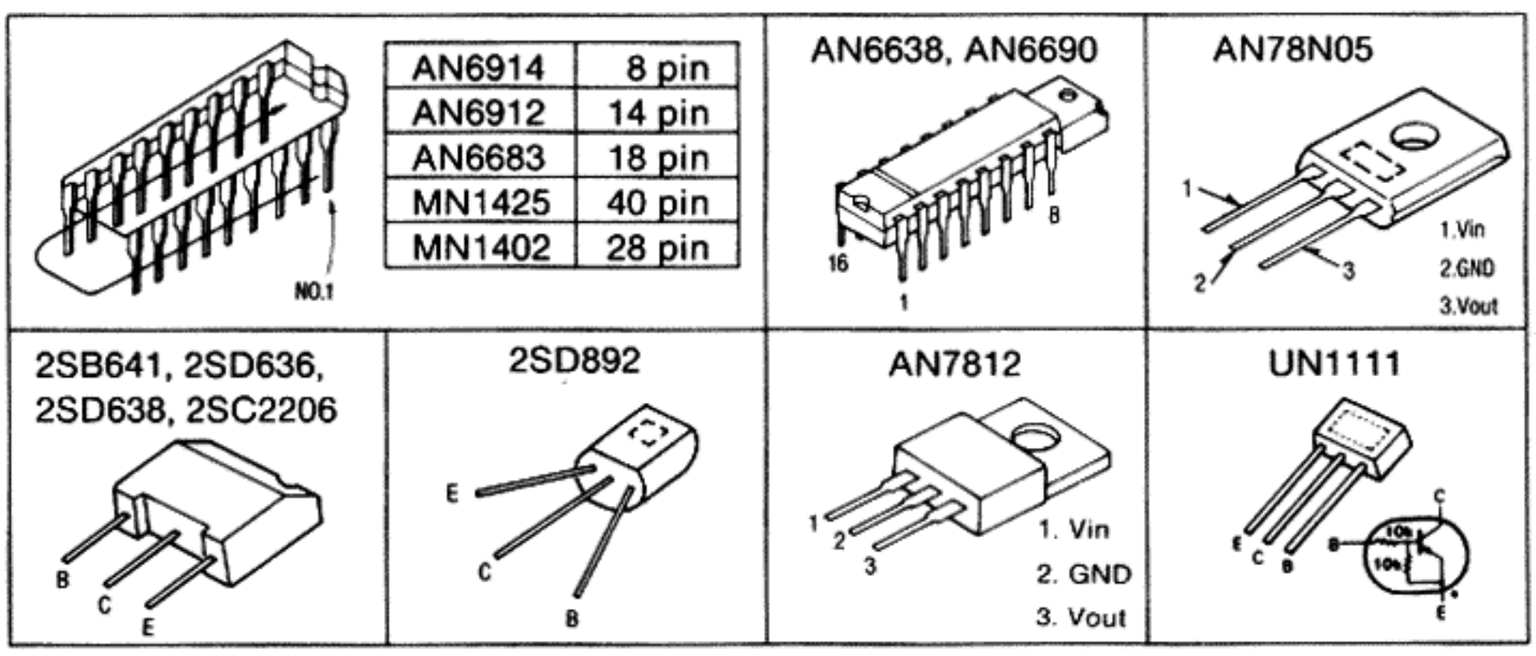

■ CIRCUIT BOARD AND WIRING CONNECTION DIAGRAM

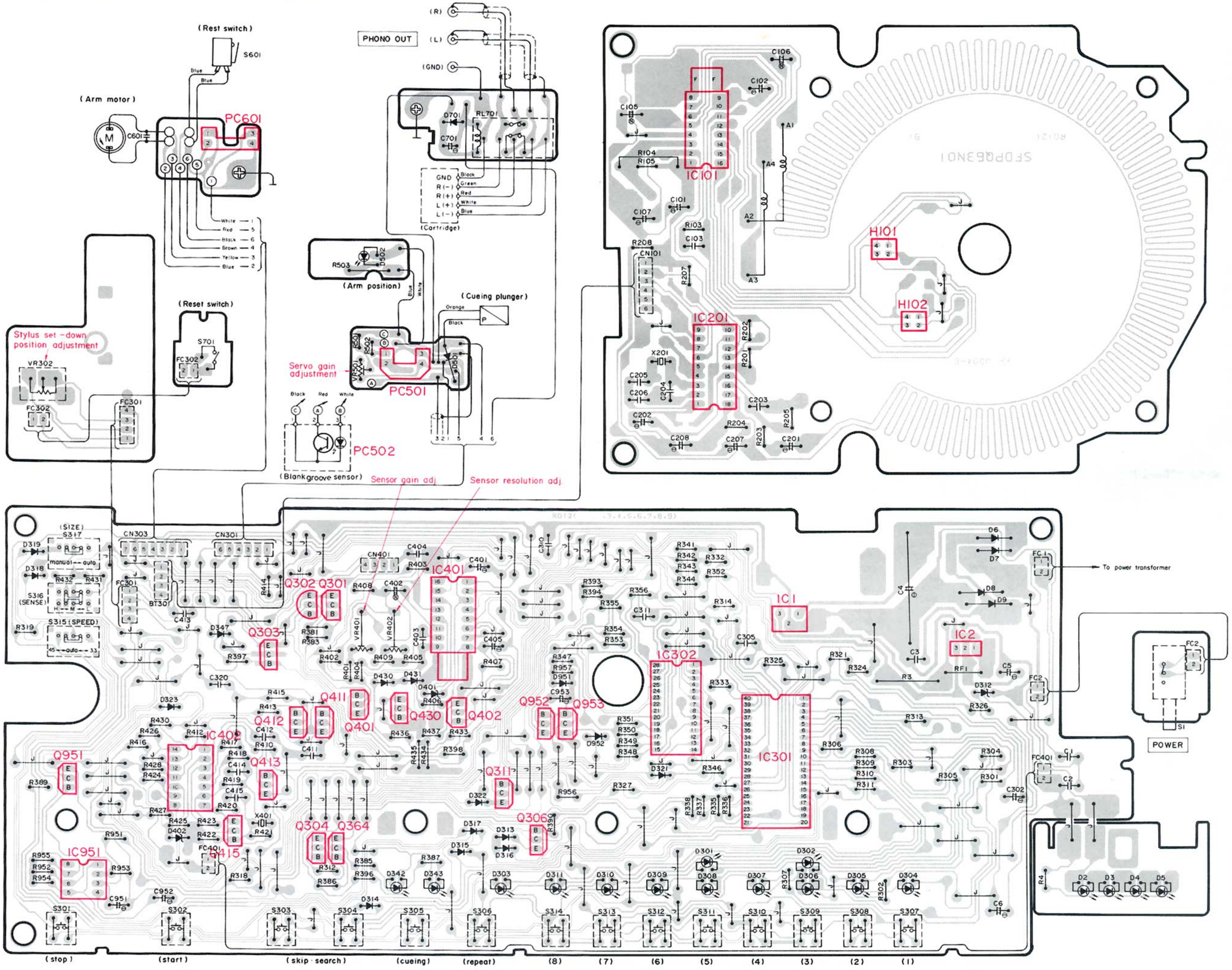

SCHEMATIC DIAGRAM (This schematic diagram may be modified at any time with development of new technology.)

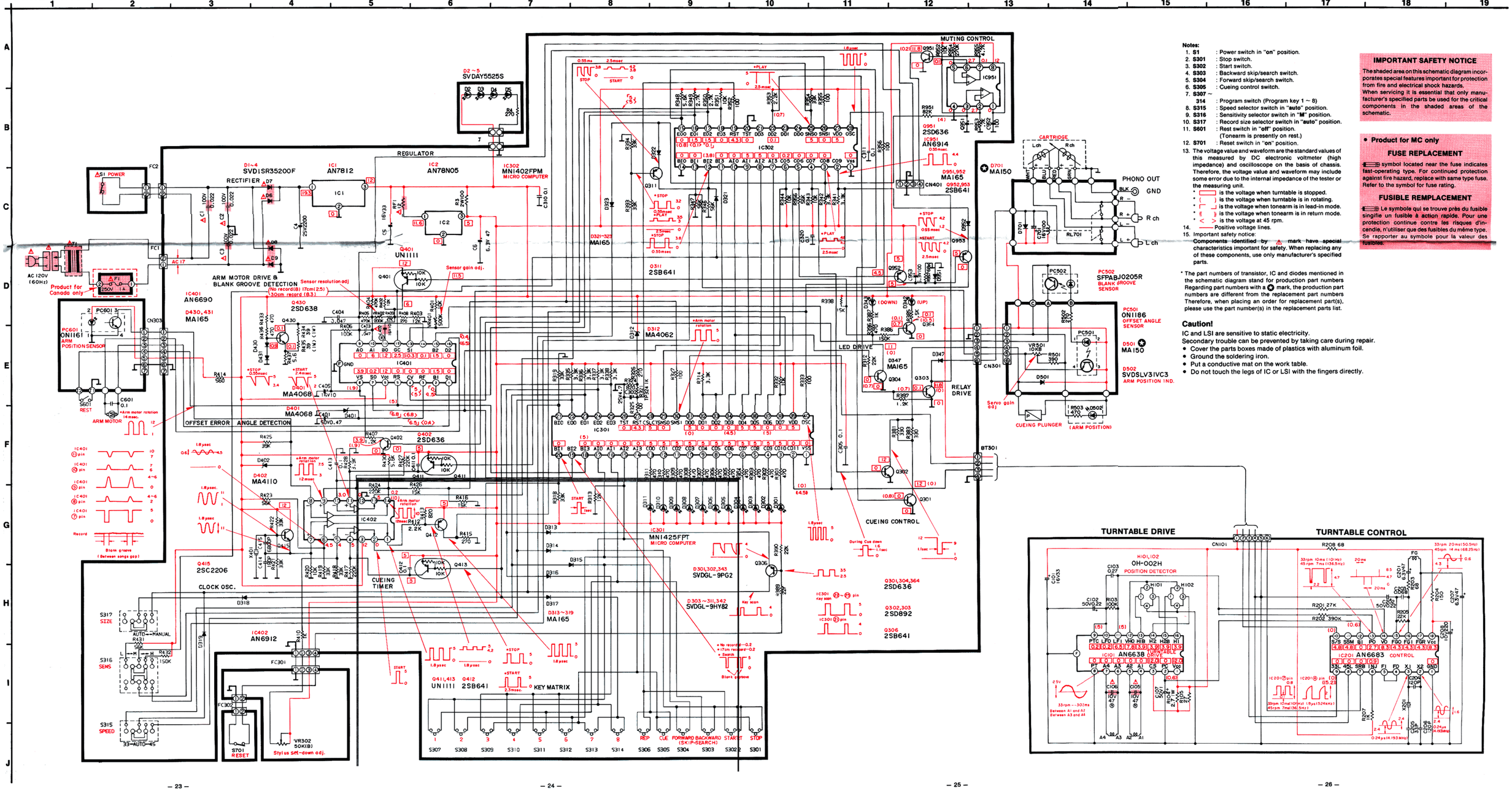

Notes:

1. S1 : Power switch in "on" position.
2. S301 : Stop switch.
3. S302 : Start switch.
4. S303 : Backward skip/search switch.
5. S304 : Forward skip/search switch.
6. S305 : Cueing control switch.
7. S307 ~ S14 : Program switch (Program key 1 ~ 8)
8. S315 : Speed selector switch in "auto" position.
9. S316 : Sensitivity selector switch in "M" position.
10. S317 : Record size selector switch in "auto" position.
11. S601 : Rest switch in "off" position. (Tonearm is presently on rest.)
12. S701 : Reset switch in "on" position.
13. The voltage value and waveform are the standard values of this measured by DC electronic voltmeter (high impedance) and oscilloscope on the basis of chassis. Therefore, the voltage value and waveform may include some error due to the internal impedance of the tester or the measuring unit.
    - ▭ is the voltage when turntable is stopped.
    - ( ) is the voltage when turntable is in rotating.
    - ⌐ ¬ is the voltage when tonearm is in lead-in mode.
    - ⌐ ¬ is the voltage when tonearm is in return mode.
    - < > is the voltage at 45 rpm.
14. —— Positive voltage lines.
15. Important safety notice:
    Components identified by ⚠ mark have special characteristics important for safety. When replacing any of these components, use only manufacturer's specified parts.

* The part numbers of transistor, IC and diodes mentioned in the schematic diagram stand for production part numbers. Regarding part numbers with a ✪ mark, the production part numbers are different from the replacement part numbers. Therefore, when placing an order for replacement part(s), please use the part number(s) in the replacement parts list.

Caution!

IC and LSI are sensitive to static electricity.
Secondary trouble can be prevented by taking care during repair.

- Cover the parts boxes made of plastics with aluminum foil.
- Ground the soldering iron.
- Put a conductive mat on the work table.
- Do not touch the legs of IC or LSI with the fingers directly.

IMPORTANT SAFETY NOTICE

The shaded area on this schematic diagram incorporates special features important for protection from fire and electrical shock hazards.
When servicing it is essential that only manufacturer's specified parts be used for the critical components in the shaded areas of the schematic.

• Product for MC only

FUSE REPLACEMENT

▭ symbol located near the fuse indicates fast-operating type. For continued protection against fire hazard, replace with same type fuse. Refer to the symbol for fuse rating.

FUSIBLE REMPLACEMENT

▭ Le symbole qui se trouve près du fusible singifie un fusible à action rapide. Pour une protection continue contre les risques d'incendie, n'utiliser que des fusibles du même type. Se rapporter au symbole pour la valeur des fusibles.

■ BLOCK DIAGRAM

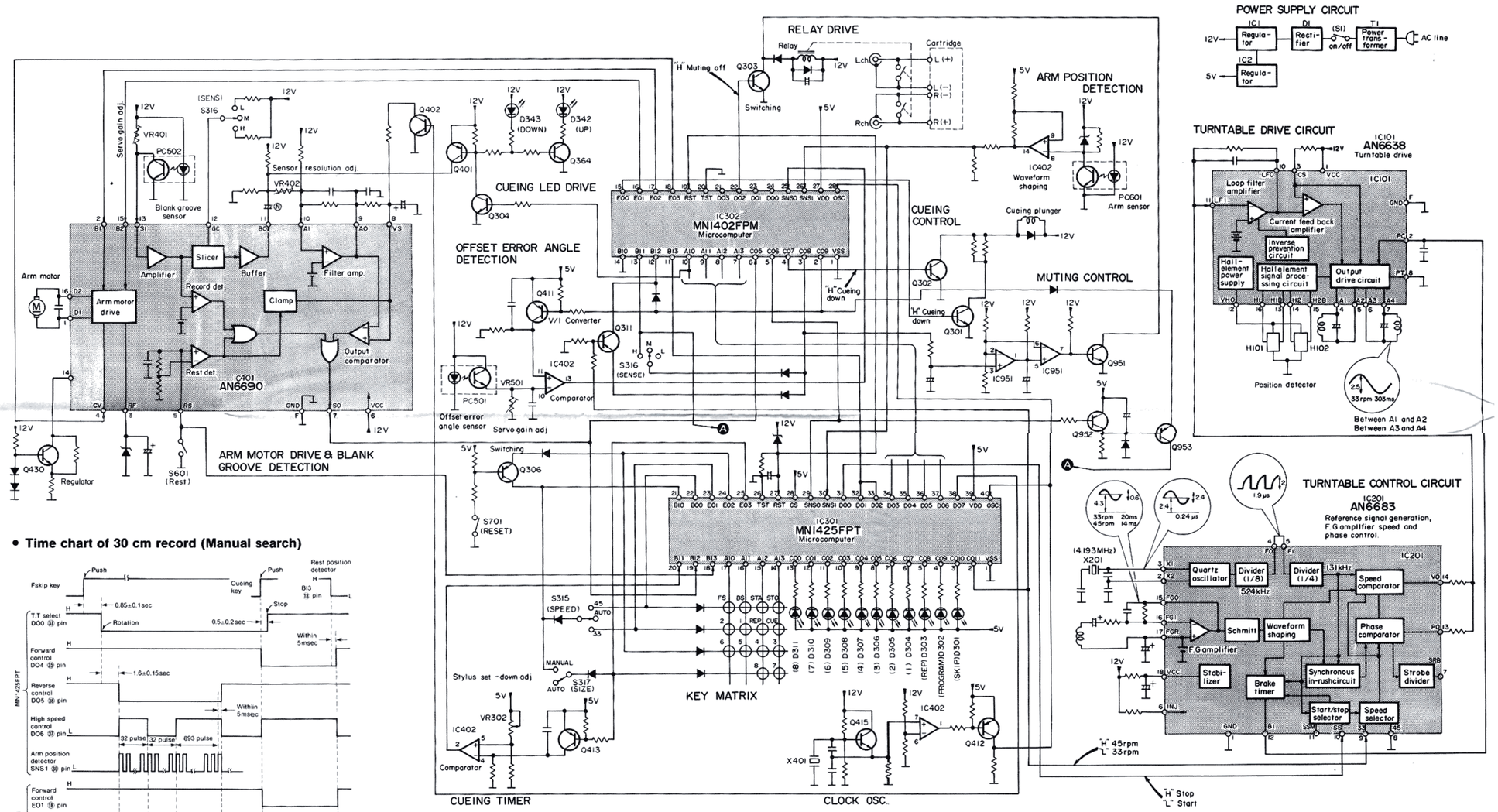

• **Time chart of 17 cm record (Lead-in)**

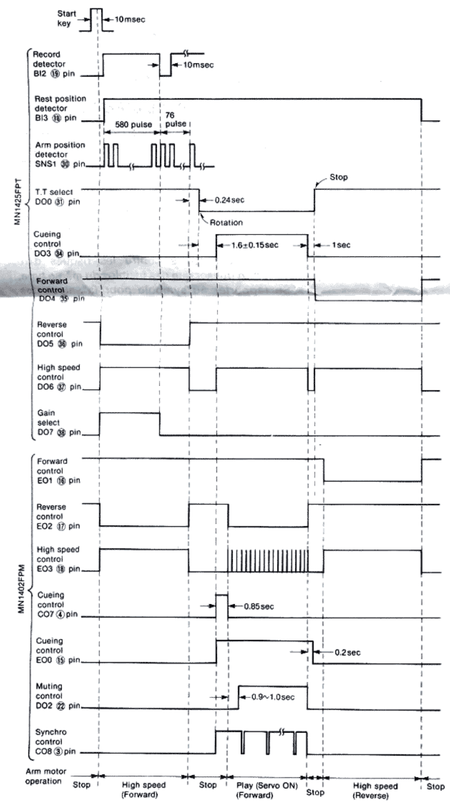

• **Time chart of 30 cm record (Manual search)**

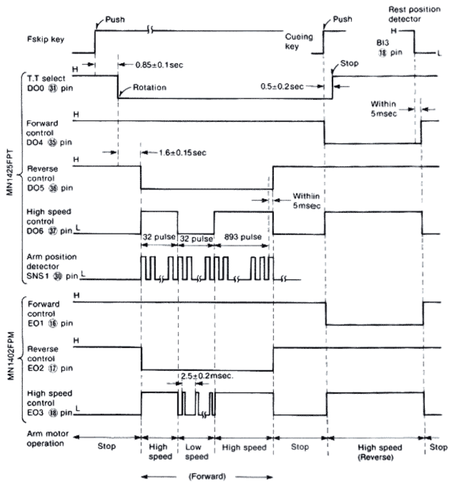

• **Function of terminal of MN1425FPT**

No.	Symbol	Description
1	VSS	Ground terminal
2	CO11	Turntable speed select (45 rpm "H", 33 rpm "L")
3	CO10	Skip indicator display
4	CO9	Program indicator display
5	CO8	Repeat indicator display
6	CO7	Program No. 1 indicator display
7	CO6	Program No. 2 indicator display
8	CO5	Program No. 3 indicator display
9	CO4	Program No. 4 indicator display
10	CO3	Program No. 5 indicator display
11	CO2	Program No. 6 indicator display
12	CO1	Program No. 7 indicator display
13	CO0	Program No. 8 indicator display
14	AI3	Key (F skip, B skip, start, stop, repeat, cueing and program) are read by key scan of E port (pin No. ㉒ ~ ㉕).
15	AI2	
16	AI1	
17	AI0	
18	BI3	Rest position detection ("L" when tonearm is on rest)

Lights up at "L"

No.	Symbol	Description
19	BI2	• Blank pulse read (during cueing up) and blank width correction pulse count end (during cueing down) signa input terminal. • Blank pulse is active at "L". • Record detection 30 cm record is present / No record / 17 cm record is present • Blank width correction pulse counting is done until BI2 becomes "L" after cueing down.
20	BI1	Reading to stylus lowering adjust timer. E03 BI1 t Time to until BI1 is "H" after E03 becomes "H" just before cueing down of arm is read into microcomputer.
21	BI0	Turntable platter speed select, reset switch detection and record size select are performed by key scan (E port pin No. ㉒ ~ ㉕) and BI0 key scan.
22	EO0	Keys (F skip, B skip, start, stop, repeat, cueing and program) are read by key scan of A port (pin No. ⑭ ~ ⑰), and turntable platter speed select, reset switch detection, and record size selector are performed by key scan of E port and BI0.
23	EO1	
24	EO2	
25	EO3	

No.	Symbol	Description
26	TST	Test terminal
27	RST	Reset terminal (Micom is reset at "L")
28	CSLCT	Select terminal
29	SNS0	Return detection in play mode (Return at "H")
30	SNS1	Arm position detection signal input terminal
31	DO0	Turntable start, stop select ("H" stop, "L" start)
32	DO1	Speed detection program play mode. (ON at "H")
33	DO2	
34	DO3	Tonearm motor and cueing (muting) control
35	DO4	
36	DO5	
37	DO6	
38	DO7	Gain select in record size select mode (ON at "H")
39	VDD	Power supply
40	OSC	Clock oscillation (Frequency : 525 kHz)

• Function of terminal of MN1402FPL

No.	Symbol	Description
1	VSS	Ground terminal
2	CO9	Key scan strobe (Offset error angle read strobe) — Seansitivity and speed selector keys are read by key scan of C08, C09, BI1, BI2.
3	CO8	Key scan strobe (Synchro. rec. control, ON at "H") — Seansitivity and speed selector keys are read by key scan of C08, C09, BI1, BI2.
4	CO7	Cueing control
5	CO6	Return detection in play mode (return at "H")
6	CO5	Pulse count end signal (end at "L")
7	AI3	• Tonearm motor and cueing (muting) control • The 4-bit signal from MN1425FPT causes the state to become as follows:
8	AI2	
9	AI1	
10	AI0	
11	BI3	Speed (blank) detection during program play (ON at "H")
12	BI2	Key scan Sensitivity and speed selector keys are read by key scan of C08, C09, BI1, BI2.
13	BI1	
14	BI0	Not used in this unit (Ground)
15	EO0	Cueing control
16	EO1	Arm motor control
17	EO2	
18	EO3	
19	RST	Reset terminal (Micom is reset at "L")
20	TST	Test terminal
21	DO3	Not used in this unit
22	DO2	Muting control ("H" muting OFF)
23	DO1	Not used in this unit
24	DO0	
25	SNS0	Offset angle detection signal input terminal
26	SNS1	Arm position detection signal input termenal
27	VDD	Power supply
28	OSC	Clock oscillation (Frequency : 525 kHz)

No.	7	8	9	10
Arm free	L	L	L	L
Forward search	L	L	H	L
Backward search	L	H	L	L
Brake (stop)	L	H	H	L

No.	7	8	9	10
Lead-in	H	L	H	L
Return	H	H	L	L

No.	16	17	18
Arm free	L	L	L
Brake	H	H	L
Forward slow	H	L	L

No.	16	17	18
Lead-in	H	L	H
Backward slow	L	H	L
Return	L	H	H

Printed in Japan
850204020 Ⓢ AM/YW
850505600 Ⓢ AM

ORDER NO. HAD85052563A9

Service Manual

Turntable System

SL-L3

QUARTZ Direct Drive
Automatic Turntable System

Color

(S)..... Silver Type
(K) .... Black Type

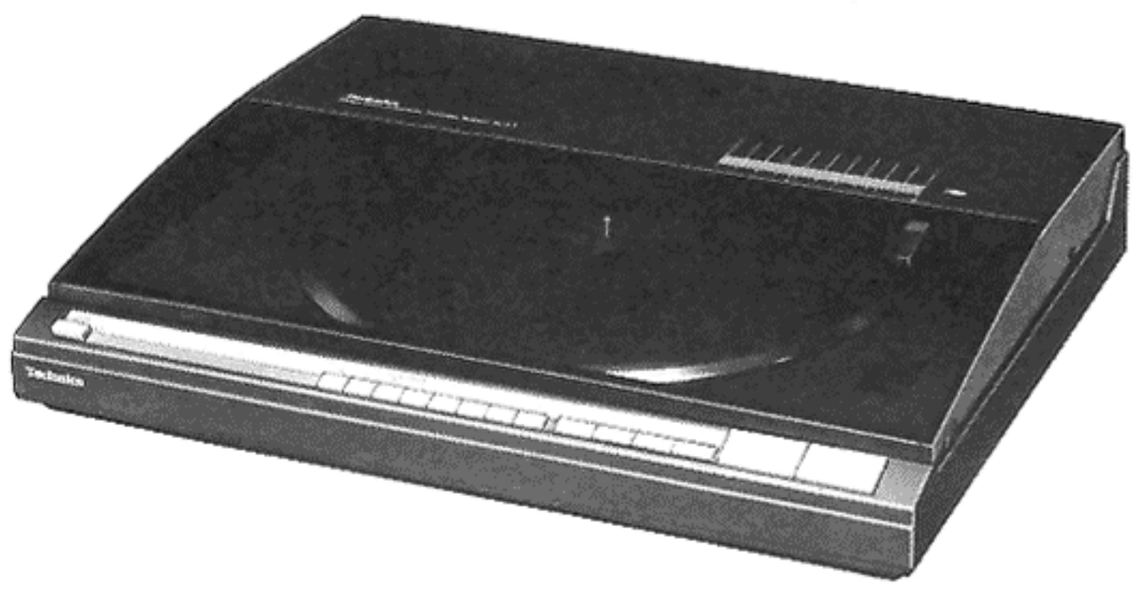

Color	Areas
(S) (K)	[E] ..... Switzerland and Scandinavia.
(S) (K)	[EK] .... United Kingdom.
(S) (K)	[XL] .... Australia.
(S) (K)	[EG] ... F.R. Germany.
(S) (K)	[EB] .... Belgium.
(S) (K)	[EH] .... Holland.
(S) (K)	[EF] .... France.
(S) (K)	[Ei] ..... Italy.
(S) (K)	[EC] .... Czechoslovakia.
(S) (K)	[XA] .... Southeast Asia, Oceania, Africa, Middle Near East and Central South America.
(S) (K)	[PA] .... Far East PX.
(S) (K)	[PE] .... European Military.
(S) (K)	[PC] .... European Audio Club.

T4P is the standard mark for plug-in-connector type. Products carrying this mark are interchangeable and adaptable among each other.

Please use this manual together with the service manual for Model No. SL-L3 [M], Order No. HAD85042489C1.

SPECIFICATIONS

■ Turntable section

Type: Direct drive
Automatic turntable

Features: Auto start/Auto lead-in,
Auto return,
Auto stop,
Forward search play,
Backward search play,
Repeat play,
Record presence detection

Drive method: Direct drive

Motor: Brushless DC motor

Turntable platter: Aluminum die-cast
Diameter 30 cm

Turntable speeds: 33-1/3 rpm and 45 rpm

Wow and flutter: 0.012% WRMS*
0.025% WRMS (JIS C5521)
±0.035% peak
(IEC 98A Weighted)

*Measured by obtaining signal from built-in frequency generator of motor assembly.

Rumble: −56 dB (IEC 98A Unweighted)
−78 dB (IEC 98A Weighted)

■ Tonearm section

Type: Linear tracking tonearm
4-pivot gimbal suspension

Effective length: 10.5 cm (4-1/8")

Tracking error angle: Within ±0.1°

Effective mass: 9 g (including cartridge)

Resonance frequency: 12 Hz

Technics

Matsushita Electric Trading Co., Ltd.
P.O. Box 288, Central Osaka Japan

Panasonic Tokyo Office
Matsushita Electric Trading Co., Ltd.
1-2, 1-chome, Shibakoen, Minato-ku, Tokyo 105, Japan

Tonearm drive motor:	DC motor
Stylus pressure:	1.25 g (fixed)

■ Cartridge section

Model No.:	EPC-P33
Type:	Moving magnet stereo cartridge [T4P]
Magnetic circuit:	All laminated core
Frequency response:	10 Hz ~ 50 kHz 20 Hz ~ 10 kHz±1 dB
Output voltage:	2.5 mV at 1 kHz, 5 cm/s. zero to peak lateral velocity (7 mV at 1 kHz, 10 cm/s. zero to peak 45° velocity [DIN 45 500])
Channel separation:	22 dB at 1 kHz
Channel balance:	Within 1.8 dB at 1 kHz
Recommended load impedance:	47 kΩ~100 kΩ
Compliance (dynamic):	12×10^{-6}cm/dyne at 100 Hz
Stylus pressure range:	1.25±0.25 g (12.5±2.5 mN)
Weight:	6 g (cartridge only)
Replacement stylus:	EPS-33ES (Elliptical)

■ General

Power supply:	For Australia and United Kingdom: AC 240 V, 50 Hz For continental Europe: AC 220 V, 50 Hz For others: ~ 110-127/220-240 V, 50 or 60 Hz
Power consumption:	For Australia, United Kingdom and continental Europe: 14 W For others: 16 W
Dimensions: (W × H × D)	43 × 9 × 35 cm (Maximum height when the dust cover is open) 39 cm
Weight:	5.2 kg

Specifications are subject to change without notice for further improvement.

TECHNISCHE DATEN

■ Plattenteller

Typ:	Automatischer Plattenteller mit Quarz-Direktantrieb
Eigenschaften:	Auto-Start/Auto-Zuführung Auto-Rückkehr/Auto-Stop Wiederholtes Abspielen Programm-Abspielen Direktmusikwahl Vorwärts- und Rückwärts-Sprungabspiel Vorwärts- und Rückwärts-Suchabspiel Autom. Plattengrößenwahl Schallplattendetektion
Antrieb:	Direktantrieb
Motor:	Kollektorloser Gleichstrommotor
Antriebsregel-Methode:	Quarz-Steuerung QPL
Plattenteller:	Aluminium-Druckguß Durchmesser 30 cm
Plattenteller-Drehzahlen:	33-1/3 und 45 U./min Automatische Drehzahlwahl (manuelle Wahl möglich)
Gleichlaufschwankungen:	0,012% WRMS* 0,025% WRMS (JIS C5521) ±0,035% Spitze (IEC 98A bewertet)

*Gemessen anhand von Signalen vom eingebauten Frequenzgenerator des Motorteils.

Rumpeln:	−56 dB (IEC 98A unbewertet) −78 dB (IEC 98A bewertet)

■ Tonarm

Typ:	Linearabtastungs-Tonarm mit Kardanaufhängung mit 4-Punkt-Drehlager
Effektive Länge:	10,5 cm
Spurfehlwinkel:	Innerhalb ±0,1°
Effektive Masse:	9 g (einschließlich Tonabnehmer)
Resonanzfrequenz:	12 Hz
Tonarm-Antriebsmotor:	Gleichstrommotor
Nadeldruck:	1,25 g (nicht einstellbar)

■ Tonabnehmer

Modell Nr.:	EPC-P33
Typ:	Beweglicher Magnet-Stereotonabnehmer [T4P]
Magnetkreis:	Ganzlamellenkern
Frequenzgang:	10 Hz bis 50 kHz 20 Hz bis 10 kHz ±1 dB
Ausgangsspannung:	2,5 mV bei 1 kHz 5 cm/s. Null-zu-Spitze, lateral [7 mV bei 1 kHz 10 cm/s. Null-zu-Spitze, 45° (DIN 45 500)]
Kanaltrennung:	22 dB bei 1 kHz
Kanalabweichung:	Innerhalb 1,8 dB bei 1 kHz
Empfohlene Endimpedanz:	47 kΩ~100 kΩ
Nachgiebigkeit (dynamisch):	12×10^{-6}cm/dyn bei 100 Hz
Nadeldruckbereich:	1,25±0,25 g (12,5±2,5 mN)
Gewicht:	6 g (nur Tonabnehmer)
Ersatznadel:	EPS-33ES (elliptisch)

■ Allgemeine Daten

Stromversorgung:	~220 V, 50 Hz
Leistungsaufnahme:	14 W
Abmessungen: (B × H × T)	43 × 9 × 35 cm (Maximale Höhe bei vollständig geöffnetem Gehäuseoberteil) 39 cm
Gewicht:	5,2 kg

Die technischen Daten können infolgen von Verbesserungen ohne Ankündigung geändert werden.

CARACTERISTIQUES

■ Section de la platine

Type:	Entraînement direct par quartz Système de platine automatique
Caractéristiques:	Démarrage automatique/Entrée automatique, Retour automatique/Arrêt automatique, Audition répétée, Audition programmée, Audition sélectionnée musicale directe, Audition de saut vers l'avant et l'arrière, Audition de recherche vers l'avant et l'arrière, Sélection automatique du diamètre des disques, Détection de la présence d'un disque.
Système d'entrainement:	Entraînement direct
Moteur:	Moteur C.C. sans balai
Système de commande d'entrainement:	Réglage d'accrochage de phase par quartz
Plateau de lecture:	Aluminium moulé sous pression Diamètre 30 cm
Vitesses de la platine:	33-1/3 et 45 t/p.m. Sélecteur de vitesse automatique (Sélection manuelle possible)
Pleurage et scintillement:	0,012% de valeur efficace* 0,025% de valeur efficace (JIS C5521) ±0,035% de crête (IEC 98A pondére)

*Mesuré par l'obtention d'un signal provenant du générateur de fréquences incorporé de l'ensemble du moteur.

Ronflement:	−56 dB (IEC 98A non pondéré) −78 dB (IEC 98A pondéré)

■ Section du bras de lecture

Type:	Bras de lecture d'alignement linéaire de type à suspension à la cardan sur 4 pivots
Longueur effective:	10,5 cm
Erreur d'angle d'alignement de piste:	En deçà de ±0,1°
Masse réelle:	9 g (y compris la cellule)
Fréquence de résonance:	12 Hz
Moteur d'entrainement du bras de lecture:	Moteur C.C.
Force verticale d'appui:	1,25 g (Fixé)

■ Section de la cellule pick-up

N°-olu modèle:	EPC-P33
Type:	Cellule pick-up stéréo à aimant mobile TAP
Circuit magnétique:	Noyau entièrement feuilleté
Réponse en fréquence:	10 Hz à 50 kHz 20 Hz à 10 kHz ±1 dB
Tension de sortie:	2,5 mV à 1 kHz; 5 cm/s. zéro à vitesse latérale de crête [7 mV à 1 kHz; 10 cm/s. zéro à vitesse 45° de crête (DIN 45 500)]
Séparation des canaux:	22 dB à 1 kHz
Equilibrage des canaux:	En deçà de 1,8 dB à 1 kHz
Impédance de charge recommandée:	47 kΩ~100 kΩ
Elasticité acoustique: (dynamique)	12×10^{-6} cm/dyne à 100 Hz
Plage de la force verticale d'appui:	1,25±0,25 g (12,5±2,5 mN)
Poids:	6 g (cellule seule)
Remplacement de la pointe de lecture:	EPS-33ES (Pointe de lecture ellipsoïdale)

■ Généralités

Alimentation:	~220V, 50 Hz
Consommation:	14 W
Dimensions: (L × H × P)	43 × 9 × 35 cm (Hauteur maximum lorsque le couvercle protège-poussière est ouvert: 39 cm)
Poids:	5,2 kg

Sujet à changement sans prearis.

ESPECIFICACIONES

■ Sección del plato giratorio

Tipo: Plato giratorio automático con accionamiento directo de cuarzo

Ventajas: Arranque/Descenso automáticos
Retorno/Parada automáticos
Ejecución repetida
Ejecución programada
Ejecución con selección directa de música
Ejecución con salto hacia adelante y hacia atrás
Ejecución con búsqueda hacia adelante y hacia atrás
Selección automática de tamaño
Detección de disco metido

Método de accionamiento: Accionamiento directo

Motor: Motor de corriente continua sin escobillas

Método de control de accionamiento: Control enclavado de fase de cuarzo

Platillo del plato giratorio: Aluminio fundido
30 cm de diámetro

Velocidades del plato giratorio: 33-1/3 y 45 rpm
Selección automática de la velocidad
(También posibilidad de seleccionar a mano)

Ululaciones y trémolo: 0,012% WRMS*
0,025% WRMS (JIS C5521)
±0,035% cresta
(IEC 98A Ponderado)

*Medido obteniendo una señal proveniente del generador de frecuencias incorporado del conjunto del motor.

Ruido de rodadura: −56 dB (IEC 98A No ponderado)
−78 dB (IEC 98A Ponderado)

■ Sección del brazo sonoro

Tipo: Brazo sonoro de seguimiento lineal con suspensión cardánica de 4 pivotes

Longitud efectiva: 10,5 cm

Angulo de error de seguimiento: Inferior a 0,1° aproxim.

Masa efectiva: 9 g (incluyendo el cartucho)

Frecuencia de resonancia: 12 Hz

Motor de accionamiento del brazo sonoro: Motor de corriente continua

Presión de la aguja: 1,25 g (fija)

■ Sección del cartucho

Núm. del modelo: EPC-P33

Tipo: Cartucho estereofónico de imán móvil TAP

Circuito magnético: Núcleo totalmente laminado

Respuesta de frecuencia: 10 Hz a 50 kHz
20 Hz a 10 kHz ±1 dB

Voltaje de salida: 2,5 mV a 1 kHz
Velocidad lateral de cero a cresta de 5 cm/s
(7 mV a 1 kHz, Velocidad de 45° de cero a cresta de 10 cm/s [DIN 45 500])

Separación de canales: 22 dB a 1 kHz

Equilibrio de canales: Inferior a 1,8 dB a 1 kHz

Impedancia de carga recomendada: 47 kΩ a 100 kΩ

Elasticidad (dinámica): 12×10^{-6}cm/dina a 100 Hz

Radio de presión de la aguja: 1,25±0,25 g (12,5±2,5 mN)

Peso: 6 g (cartucho solamente)

Aguja de recambio: EPS-33ES
(Aguja elíptica)

■ En general

Alimentación de corriente: ~110-127/ 220-240V, 50 ó 60 Hz

Consumo de corriente: 16W

Dimensiones: (Ancho×Alto×Prof.) 43 × 9 × 35 cm
(Altura máxima cuando la tapa contra el polvo está abierta: 39 cm)

Peso: 5,2 kg

Estas especificaciones están sujetas a cualquier cambio sin previo eviso.

■ MESSUNGEN UND JUSTIERUNGEN Deutsch

• Verwendete Geräte und Zustand des Gerätes

1. Oszilloskop
2. Gleichstrom-Voltmeter
3. Plate (SFTR007) für Justierung
4. Den Empfindlichkeits-Wahlschalter des optischen Sensors auf "M" stellen.

Schritt	Gegenstand	Vorbereitungen für die Justierung	Zu justierende Teile	Justiermethode
1	**Startposition**	1) Das Gehäuseoberteil öffnen und die Platte auflegen. 2) Den Ein/Aus-Schalter einschalten. 3) Den Startschalter drücken.	Absenk-positions-Justierschraube **(Abb. 1)**	• Die Startposition-Justierschraube drehen. Falls er zwischen Musikstücken absenkt, die Schraube entgegen dem Uhrzeigersinn drehen.
2	**Sensorverstärkung**	1) Das Gleichstrom-Voltmeter an IC401, Stift 12 (+) und Masse (−) anschließen. 2) Die Platte für Justierung mit Seite A auflegen. 3) Das Gehäuseoberteil schließen.	VR401 **(Abb. 2)**	1) Den Ein/Aus-Schalter einschalten. 2) Der Tonarm ist in der Ruheposition. (Unbespielter Teil der Platte.) 3) VR401 so abgleichen, daß die Ausgangsspannung 8,5V±0,3V verträgt.
3	**Sensorauflösung**	1) Das Oszilloskop an IC401, Stift 9 (+) und Masse (−) anschließen. 2) Die Platte für Justierung mit Seite A auflegen. 3) Das Gehäuseoberteil schließen.	VR402 **(Abb. 2)**	1) Den Ein/Aus-Schalter einschalten. 2) Den F-Überspring-Schalter gebrückt halten, um den Tonarm zu bewegen. (Ausgangsleistung tritt auf zwischen den Musikstücken.) 3) VR402 so abgleichen, daß die maximale Ausgangsleistung zwischen den Musikstücken 3V±0,3V beträgt. **(Abb. 3)**
4	**Nadel-Absenkposition**	1) Leistungsdraht mit Klemme an CN301, Shift 6 und Stift 2 der Betriebs-Platine anschließen. (Stummschal tungsbetrieb stoppt.) 2) Das Gehäuseoberteil öffnen und den Gehäuseschalter mit Klebband in der gedrückten Stellung arretieren. 3) Die Platte für Justierung mit Seite B auflegen. 4) Das Gehäuseoberteil schließen. 5) Das Gerät an den Verstärker anschließen. (Die Lautsprecher an die Lautsprecher-Anschlüsse anschließen.)	VR302 **(Abb. 4)**	1) Den Ein/Aus-Schalter einschalten. 2) Die Programmtaste 2 und anschließend den Startschalter drücken. 3) Nach Beendigung des Liftbetriebs die Programmtaste 2 zum Zwecke des Überspringens drücken. 4) Überprüfen, daß die Absenkposition bei "13" liegt. 5) VR302 so justieren, daß die Absenk-position bei "13" auf der Skala ist. **Anmerkung:** • VR302 Kann auch von der Geräterückseite her justiert werden. **(Abb. 4 (B))**
5	**Tonarm-Spurfehlwinkel**	1) Die Staubabdeckung entfernen. (Siehe "ANLEITUNG FÜR DIE DEMONTAGE".) 2) Das Gehäuseoberteil öffnen und den Gehäuseschalte mit Klebband in der gedrückten Stellung arretieren. 3) Das Gehäuseoberteil schließen. 4) Eine Platte auflegen.	Justierschraube **(Abb. 5)**	1) Den Ein/Aus-Schalter einschalten. 2) Den F-Überspring-Schalter gedrückt halten, um den Tonarm zu bewegen. 3) Die Justierschraube so weit drehen, daß die Tonarmmitte mit der V-Kerbe der Liftstange übereinstimmt.
6	**Servo-Verstärkung und Offsetspannung**	1) Die Staubabdeckung entfernen. (Siehe "ANLEITUNG FÜR DIE DEMONTAGE".) 2) Das Gehäuseoberteil öffnen und den Gehäuseschalter mit Klebband in der gedrückten Stellung arretieren. 3) Das Gleichstrom-Voltmeter an CN301, Stift 5 (+) und Stift 2 (−) anschließen. 4) Die Sensorabdeckung entfernen.	VR501 (Servo Verstärkung) Schraube (Offset-Spannung) **(Abb. 6)**	1) Den Ein/Aus-Schalter einschalten. 2) Den F-Überspring-Schalter gedrückt halten, um den Tonarm zu bewegen. 3) Das Gehäuseoberteil öffnen. 4) Den Tonarm ganz nach links bewegen. Dann VR501 so justieren, daß die Spannung 6,0V beträgt. (Servo-Verstärkung) 5) Den Tonarm zur Mitte him stellen und überüfen, daß die Ausgangsspannung 3,0V beträgt. 6) Falls die Spannung nicht 3,0V betragt, ist die Schraube so zu justieren, daß die Ausgansspannung 3,0V beträgt. (Offset-Spannung)

■ MESURAGES ET RÉGLAGES — Français

• Equipement utilisé et conditions de service de l'appareil

1. Oscilloscope
2. Voltmètre à C.C.
3. Disque (SFTR007) pour la mise au point
4. Régler le sélecteur de sensibilité de détecteur optique sur "M".

Etape	Artiele	Préparatifs pour la réglage	Portion du réglage	Méthode de mise au point
1	**Position de démarrage**	1) Ouvrir la boîtier supérieur et installer un disque. 2) Mettre en circuit l'interrupteur d'alimentation. 3) Appuyer sur la touche "Start" (mise en marche).	Vis d'ajustement de la position descendante. **(Fig. 1)**	• Tourner la vis de réglage du positionnement de démarrage. Si elle descend entre les plages, la tourner dans le sens inverse des aiguilles d'une montre.
2	**Gain du dispositif dérecteur**	1) Raccorder un voltmètre à C.C. aux 12 ergotes (+) de IC401 et à la terre (−). 2) Installer le disque pour la mise au point avec le côté A vers le haut. 3) Refermer le boîtier supérieur.	VR401 **(Fig. 2)**	1) Mettre en marche l'interrupteur d'alimentation. 2) Le bras de lecture est à la position de repos. (Zone vierge du disque.) 3) Ajuste VR401 de telle sorte que la tension de sortie soit de 8,5V±0,3V.
3	**Résolution du dispositif détecteur**	1) Raccorder l'oscilloscope aux 9 ergots (+) de IC401 et à la terre (−). 2) Installer le disque pour la mise au point avec le côté A vers la haut. 3) Refermer le boîtier supérieur.	VR402 **(Fig. 2)**	1) Mettre en circuit l'interrupteur d'alimentation. 2) Maintenir enfoncé le commutateur de saut F pour déplacer le bras de lecture. (La puissance de sortie est déliverée entre les plages.) 3) Ajuster VR402 de telle sorte que la puissance de crête entre les plages soit de 3V±0,3V. **(Fig. 3)**
4	**Position de pose/ relevage de la pointe de lecture**	1) Raccorder le filde jonction avec attache à la broche 2 et à la broche 6 de CN301 du circuit de fonctionnement. (Arrête fonctionnement de l'accord silencieux.) 2) Ouverir le boîtier supérieur et mainetenir appuyée la tocueh du boîtier avec une bande adhésive. 3) Installer le disque pour la mise au point avec le côté B vers le haut. 4) Refermer le boîtier supérieur. 5) Raccorder l'appareil à o'amplificateur. (Raccorder les haut-parleurs aux bornes des hautparleurs.)	VR302 **(Fig. 4)**	1) Mettre en circuit l'interrupteur d'alimentation. 2) Appuyer respectivement sur la touche de programmation 2 et sur la touche de mise en marche. 3) Après l'achèvement de la pose, appuyer sur la touche de programmation 2 dans le but d'opèrer un saut. 4) S'assurer que la position descendante est au compte de "13". 5) Régler VR302 de telle sorte que la position descendante soit au comptage de "13". **Nota:** • VR302 peut aussi être ajusté à partir de l'arrière de l'appareil. **(Fig. 4 (B))**
5	**Angle de décalage du bras de lecture**	1) Retirer le couvercle protège-poussière. (Se référer aux "INSTRUCTIONS POUR LE DÉMONTAGE".) 2) Ouvrir la boîtier supérieur et maintenir appuyée la touche du boîtier avec une bande adhésive. 3) Refermer le boîtier supéreur. 4) Installer un disque.	Vis de réglage **(Fig. 5)**	1) Mettre en circuit l'interrupteur d'alimentation. 2) Maintenir enfoncé le commutateur de saut F pour déplacer le bras de lecture. 3) Tourner la vis de réglage de façon à ce que le centre de bras cincide avec la rainure en V de la tige d'élévation.
6	**Amplification servo-mécanique et tension d'écart de réglage**	1) Retirer le couvercle protège-poussière. (Se référer aux "INSTRUCTIONS POUR LE DÉMONTAGE".) 2) Ouvrir le boîtier supérieur et maintenir appuyée la touche du boîtier avec une bande adhésive. 3) Raccorder le voltmètre à C.C. à la broche 5 (+) et à la broche 2 (−) de CN301. 4) Retirer le couvercle du dispositif détecteur.	VR501 (Amplification servo-mécanique) Plaquette à Vis. (Tension de décalage) **(Fig. 6)**	1) Mettre en circuit l'interrupteur d'alimentation. 2) Maintenir enfoncé le commutateur de saut F pour déplacer le bras de lecture. 3) Ouvrir le boîtier supérieur. 4) Déplacer complètement le bras de lecture vers la gauche. Puis, ajuster VR501 de telle sorte que la tension soit de 6,0V. (Amplification servo-mécanique) 5) Régler le bras de lecture au centre et s'assurerque la tension de sortie soit de 3,0V. 6) Si la tension n'est pas de 3,0V, ajuster la vis de telle sorte que la tension de sortie soit de 3,0V. (Tension de décalage)

■ MEDICIONES Y AJUSTE Español

• Equipos usados y estado del aparato

1. Osciloscopio
2. Voltimetro de corriente continua
3. Disco (SFTR007) de ajuste
4. Poner el selector de sensibilidad del sensor óptico en "M".

Paso	Punto tratado	Preparativos para el ajuste	Porción a ajuster	Manera de hacer el ajuste
1	**Posición de arranque**	1) Abrir el gabine superior y colocar el disco. 2) Encender el interruptor de la corriente. 3) Empujar el interruptor de arranque ("Start").	Tornillo de regulación de la posición de descenso **(Fig. 1)**	• Hacer girar el tornillo de regulación de la posición de decenso. Si se deposita en medio de una pieza, girar el tornillo hacia la izquierda.
2	**Ganancia del sensor**	1) Conectar el voltímetro de CC al perno 12 (+) de IC401 y tirra (−). 2) Colocar el disco de ajuste con el lado A mirando hacia arriba. 3) Cerrar el gabinete superior.	VR401 **(Fig. 2)**	1) Encender el interruptor de la corriente. 2) El brazo sonoro está en la posición de descanso. (Area negra del disco.) 3) Regular VR401 de manera tel que la tensión de salida sea de 8,5V ±0,3V.
3	**Rasolución del sensor**	1) Conectar el osciloscopio al perno 9 (+) de IC401 y tirra (−). 2) Colocar el disco de ajuste con el lado A mirando hacia arriba. 3) Cerrar el gabinete superior.	VR402 **(Fig. 2)**	1) Encender el interruptor de la corriente. 2) Mantener el interruptor de salto F oprimido para mover el brazo sonoro. (La salida se suministra entre las piezas.) 3) Regular VR402 de manera tal que la salida de cresta entre las piezas sea de 3V±0,3V. **(Fig. 3)**
4	**Posición de descenso de aguja.**	1) Conectar el hilo conductor con clip a 6 pernos y 2 perno CN301 de tablero de circuitos de operation. (Cesa la operación de silenciamiento.) 2) Abrir el gabinete superior y sujetar el interruptor del mismo con cinta. 3) Colocar el disco de ajuste con el lado B mirando hacia arriba. 4) Cerrar el gabinete superior. 5) Conectar el aparato al amplificador. (Conectar los altoparlantes a los bornes para conexión de los mismos.)	VR302 **(Fig. 4)**	1) Encender el interruptor de la corriente. 2) Apretar la tecla de programa 2 seguida del interruptor de arranque. 3) Una vez que el brazo sonoro haya descendido, apretar la tecla de programa 2 con el fin de saltar. 4) Asegurarse de que la posición de descenso se encuentre el el número "13". 5) Regular VR302 de manera que la posición de descenso esté en conteo "13". **Nota:** • VR302 puede tambièn adjustarse desda la parte posterior del aparato. **(Fig. 4 (B))**
5	**Angulo de descentramiento del brazo sonoro**	1) Remover la tapa contra el polvo. (Referir a "INSTRUCCION DE DESMONTAJE".) 2) Abrir el gabinete superior y sujetar el interruptor del mismo con cinta. 3) Cerrar el gabinete superior. 4) Colocar el disco.	Tornillo de ajuste **(Fig. 5)**	1) Encender el interruptor de la corriente. 2) Manetener el interruptor de salto F oprimido para mover el brazo sonoro. 3) Girar el tornillo de ajuste de manera tal que el centro del brazo concuerde con la ranura en V de la barra de elevación.
6	**Canancia del sarvome canismo y tensión de desnivel**	1) Remover la tapa contra el polvo. (Referir a "INSTRUCCION DE DESMONTAJE".) 2) Abrir el gabinete superior y sujetar el interruptor del mismo con cinta. 3) Conectar el voltimetro de CC a 5 pernos (+) y 2 pernos (−) de CN301. 4) Remover la cubierta de sensor.	VR501 (Ganancia del servo-mecanismo) Tornillo (Tensión de desnivel) **(Fig. 6)**	1) Encender el interruptor de la corriente. 2) Mantener el interruptor de salto F oprimido para mover el brazo sonoro. 3) Abrir el gabinete superior. 4) Mover completamente el brazo sonoro a la izquierda. Luego, regular VR501 de manera que la tensión sea 6,0V. (Ganancia del servomecanismo.) 5) Colocar el brazo sonoro en el centro y asegurarse de que la tension de salida sea de 3,0V. 6) Si la tensión no es 3,0V, regular el tornillo de manera que la tensión de salida sea 3,0V. (Tensión de desnivel)

■ CHANGE IN REPLACEMENT PARTS LIST

Notes:

1. Mentioned in this parts list are only those changes in Model No. SL-L3 for destination [M] area.
2. Important safety notice:
   Components identified by a ⚠ mark have special characteristics important for safety.
   When replacing any of these components, use only manufacturer's specified parts.
3. Ⓚ-marked parts are used for black only, while ○-marked parts are for silver type only.
4. Parts other than Ⓚ-and ○-marked are used for both black and silver types.
5. Bracketed indications in Ref. No. columns specify the area. Parts without these indications can be used for all areas.

Ref. No.	Change of Part SL-L3 [M]	→ SL-L3/(K)	Area & Color	Part Name & Description
SWITCH				
S901	Addition	**SFDSHXW225-3**	[XA, PA, PE, PC] only	Voltage Selector ⚠
POWER TRANSFORMER				
T1	SLT57DTL2A	**SLT57DTE15E**	[EK, XL]	Power Source ⚠
		SLT57DTS17E	[XA, PA, PE, PC]	
		SLT57DTS16E	[other]	
FUSES				
F1	Addition	**XBAS2C016T1B**	[XA, PA, PE, PC]	250V, T160mA ⚠
		XBA2C06T1B	[other]	250V, T630mA ⚠
F2	Addition	**XBA2C06T1B**	[XA, PA, PE, PC] only	250V, T630mA ⚠
CABINET AND CHASSIS PARTS				
1	SFADC13M01E	**SFADC13N01E**		Dust Cover
5	SFACC13N01E	**SFACC13N01E**	○	Cabinet
		SFACC13N21E	Ⓚ	
5-1	SFKBBD2N01	**SFKBBD2N01**	○	Badge
		SFKBBD2N21	Ⓚ	
7	SFKKC13N01	**SFKKC13S01**		Ornament Plate
43	SFACC13N011	**SFACC13N011**	○	Cover
		SFACC13N211	Ⓚ	
44	SFNNC13M01	**SFNNC13X01**	[XA]	Name Plate
		SFNNC13R01	[EG]	
		SFNNC13S01	[E, EC]	
		SFNNC13P02	[PC]	
		SFNNC13P01	[PA, PE]	
		SFNNC13G01	[EK, XL]	
		SFNNC13Q01	[other]	
45	SFDJHSC0491	**SFDJHSC0491**	[XL]	AC Socket ⚠
		SFDJHSC04912	[XA, PA, PE, PC]	
		SFDJHSC0516	[other]	

Ref. No.	Change of Part SL-L3 [M]	→ SL-L3/(K)	Area & Color	Part Name & Description
59	SFACC13N012	**SFACC13N012**	○ Except for [XA, PA, PE, PC]	Cover
		SFACC13N212	Ⓚ Except for [XA, PA, PE, PC]	
TONEARM PARTS				
72	Addition	**EPC-P33**		★ Cartridge
73	Addition	**EPS-33ES**		★ Stylus
ACCESSORIES				
A1	SFNUC13M01	**SFNUC13G01**	[EK]	Instruction Book
		SFNUC13I01	[Ei]	
		SFNUC13P01	[PA, PE, PC]	
		SFNUC13S01E	[E, EB, EH, EC]	
		SFNUC13X01	[other]	
A4	SFDAC05M01	**SFDAC05G02**	[EK]	AC Cord ⚠
		SFDAC05L01	[XL]	
		SFDAC05X02	[XA]	
		SFDAC05N01	[PA, PE, PC]	
		SFDAC05E02	[other]	
A5	Addition	**SFDKI19118**	[XA] only	2 Pin Plug ⚠
A6	Addition	**QJP0603S**	[PA, PE, PC] only	Adaptor ⚠
PACKING PART				
P1	SFHPC13M01	**SFHPC13C01**	○ [EF] only	Carton Box
		SFHPC13M01	○ [other]	
		SFHPC13F21	Ⓚ [EF] only	
		SFHPC13S21	Ⓚ [other]	

■ EXPLODED VIEW

- **Addition of cartridge and stylus**

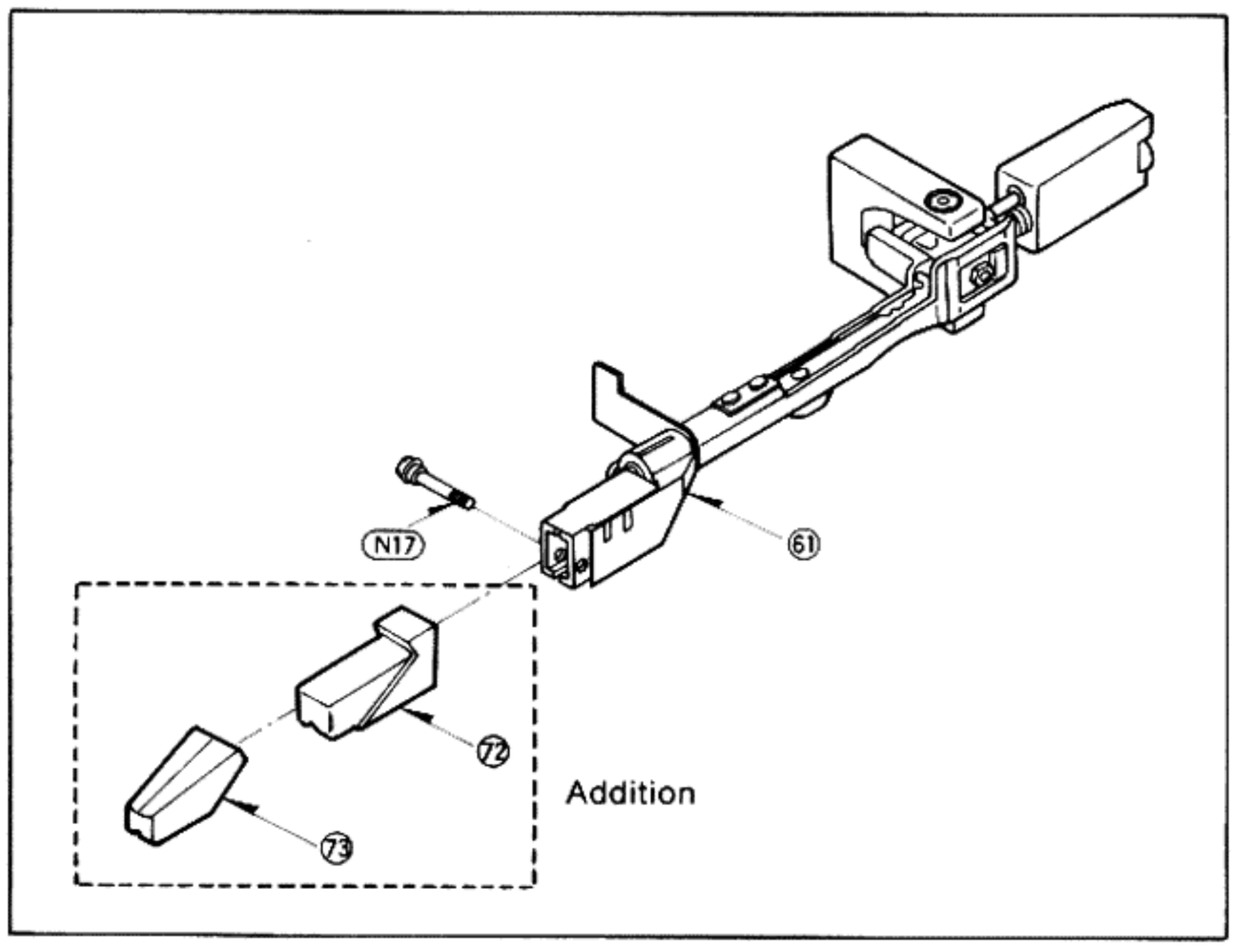

■ SCHEMATIC DIAGRAM AND PRINTED CIRCUIT BOARD

Important safety notice:

Components identified by ⚠ mark have special characteristics important for safety.
When replacing any of these components use only manufacturer's specified parts.

- **Change in power source circuit**

Product for U.S.A. ([M] area)

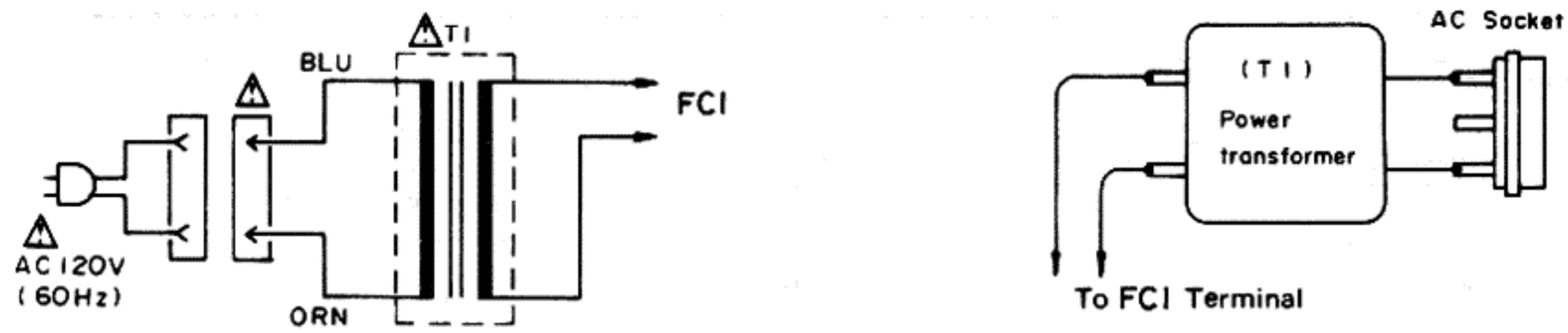

Product for Continental Europe ([E], [EG], [EB], [EH], [EF], [Ei] and [EC] areas.)

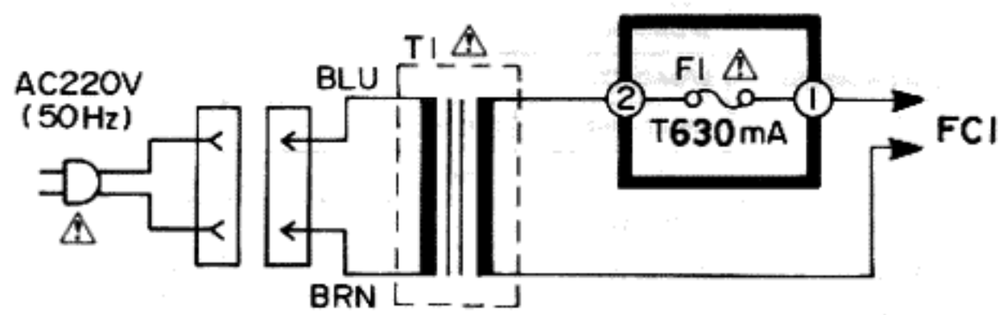

Product for United Kingdom and Australia ([EK] and [XL] areas)

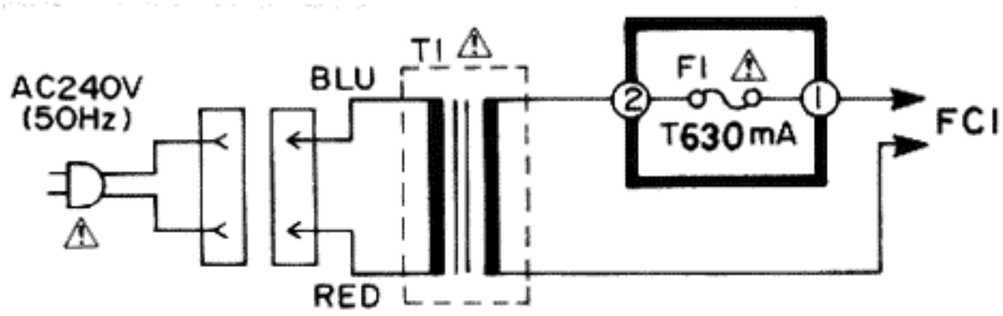

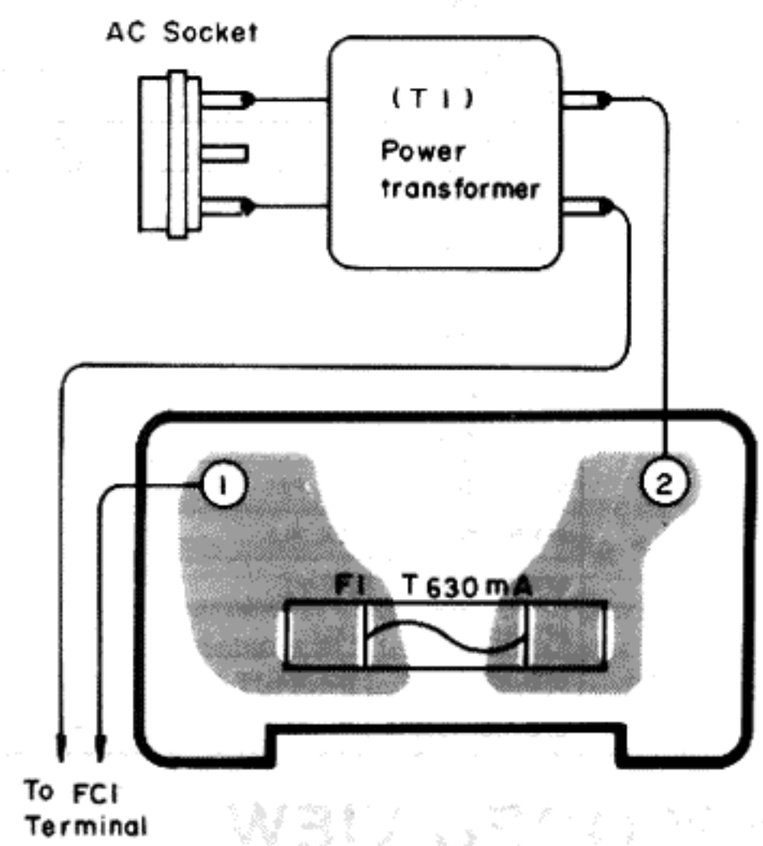

Product for Southeast Asia, Occania, Africa, Middle Near East, Central South America, Far East PX, European Military and European Audio Club. ([XA], [PA], [PE], and [PC] areas.)

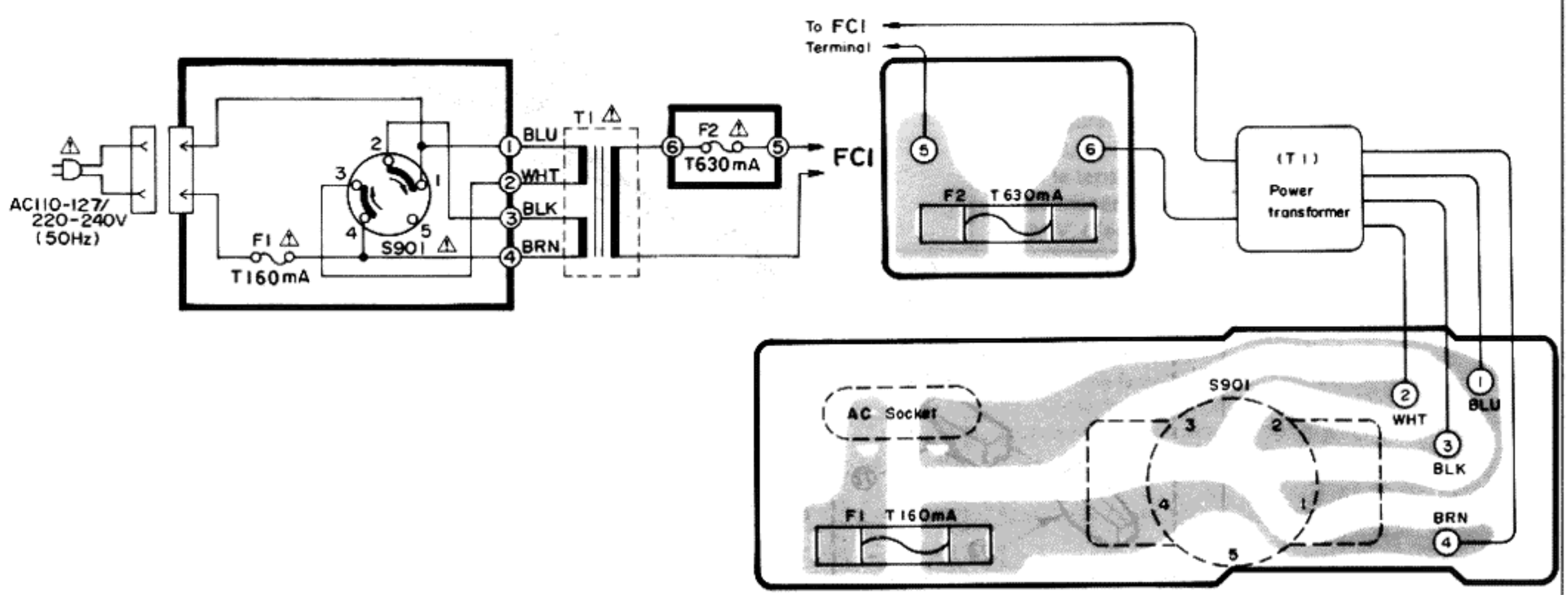

■ REPLACEMENT PARTS LIST

Notes:

1. Part numbers are indicated on most mechanical parts. Please use this part number for parts order.
2. Important safety notice:
   Components identified by ⚠ mark have special characteristics important for safety. When replacing any of these components, use only manufacturer's specified parts.
3. Ⓚ -marked parts are used for black only, while ○ -marked parts are for silver type only.
4. Part other than Ⓚ -and ○ -marked are used for both black and silver type.
5. Bracketed indications in Ref. No. columns specify the area.
   Parts without these indications can be used for all areas.
6. The "Ⓢ" mark is service standard parts and may differ from production parts.
7. The parenthesized numbers in the column of description stand for the quantity per set.

Ref. No.	Part. No.	Description
INTEGRATED CIRCUITS		
IC1	AN7812	Regulator
IC2	AN78N05	Regulator
IC101	AN6638	Turntable Drive
IC201	AN6683	Turntable Control
IC301	MN1425FPT	Micro Computer
IC302	MN1402FPM	Micro Computer
IC401	AN6690	Arm Motor Drive & Blank Groove Detector
IC402	AN6912	Comparator
IC951	AN6914	Comparator
TRANSISTORS		
Q301, 304, 364, 402, 951	2SD636	Switching
Q302, 303	2SD892	Switching
Q306, 311, 412, 952, 953	2SB641	Switching
Q401, 411, 413	UN1111	Switching
Q415	2SC2206	OSC
Q430	2SD638	Regulator
DIODES		
D2~5	SVDAY5525S	LED
D6~9	⚠SVD1SR35200V	Rectifier
D301, 302, 343	SVDGL-9PG2	LED
D303~311, 342	SVDGL-9HY82	LED
D312	MA4062	6.2V Zener
D313~319, 321~323, 347, 430, 431, 951 952	MA165	Switching
D401	MA4068	6.8V Zener
D402	MA4110	11V Zener
D501, Ⓢ 701	MA162A	Switching
D502	SVDSLV31VC3	LED
CRYSTAL		
X201	SVQSH41TR	4.1931 MHz
CERAMIC OSC		
X401	SVFCSB540P3	540 kHz
VARIABLE RESISTORS		
VR302	EVJE1AF20B54	Stylus Cue-down Position Control, 50 kΩ(B)
VR401	EVN61AA00B55	Sensor Gain Adjustment, 500kΩ(B)
VR402	EVN61AA00B25	Sensor Resolution Adjustment, 200kΩ(B)
VR501	EVNK0AA00B14	Servo Gain Adjustment, 10kΩ(B)
RELAY		
RL701	SFDYQ11N02	Muting

Ref. No.	Part. No.	Description
SWITCHES		
S1	⚠SFDSC02N02	Power
S301~314	EVQQS405K	Operation
S315, 317	SFDSHSW08314	Speed and Size Selector
S316	SFDSHSW08315	Sens Selector
S601	SFDSC02N03	Rest
S701	SFDSC05N01	Reset
S901 [XA, PA, PE, PC] only	⚠SFDSHXW225-3	Voltage Selector
PHOTO INTERRUPTERS		
PC501	0N1186	Offset Angle Sensor
PC502	SFPABJ0205R	Blank Groove Sensor
PC601	0N1161	Tonearm Position Sensor
HALL ELEMENT		
H101, 102	0H-002	Turntable Position Detector
POWER TRANSFORMER		
T1 [EK, XL]	⚠SLT57DTE15E	Power Source
T1 [XA, PA, PE, PC]	⚠SLT57DTS17E	Power Source
T1 [other]	⚠SLT57DTS16E	Power Source
FUSE		
F1 [XA, PA, PE, PC]	⚠XBAS2C016T1B	250V, T160 mA
F1 [other]	⚠XBA2C06T1B	250V, T630 mA
F2 [XA, PA, PE, PC] only	⚠XBA2C06T1B	250V, T630 mA
CABINET AND CHASSIS PARTS		
1	SFADC13N01E	Dust Cover (1)
1-1	SFGZJ02N01	Rubber Cushion (2)
2	SFGZC02N01	Rubber Cushion (2)
3	SFUMC02N14	Latch, Dust Cover (2)
4	SFUMQ06N22	Latch, Dust Cover (2)
5	○ SFACC13N01E	Cabinet (1)
5	Ⓚ SFACC13N21E	Cabinet (1)
5-1	○ SFKBBD2N01	Badge (1)
5-1	Ⓚ SFKBBD2N21	Badge (1)
6	SFGCQ06X01	Rubber Cushion, Transformer (2)
7	SFKKC13S01	Ornament (1)
8	SRKTK15N26	Knob, Power (1)
9	SFKTC13N02	Knob, Start Stop (1)
10	SFKTC13N01	Knob, Operation (1)
11	SFUPC13N01	Guide (1)
12	SFUMC13N02	Holder (B) (1)
13	SFUMC13N01	Holder (A) (1)
14	SFGBC10-01	Belt (1)

Ref. No.	Part. No.	Description
15	SFUMQ06N06A	Worm Ass'y (1)
16	SFMHC02N02R	Motor, (With Capstan) (1)
17	SFUMC02N07	Rubber Cushion (1)
18	SFUMC02N05	Lever, Switch (1)
19	SFUMQ06N09	Holder, Rest Switch (1)
20	SFUZC05N02E	Rope Ass'y (1)
21	SFXJC02N03	Guide, Rail (1)
22	SFUMQ06N07	Clamper, Guide Rail (1)
23	SFGCQ06N01	Rubber, Cushion (1)
24	SFUMC02N06	Base, Rest Switch (1)
25	SFUPBL3N11E	Base, Motor (1)
26	SFUML11R03	Wheel, Tonearm Drive (1)
27	SFUMC02N10	Holder, Lead Wire (1)
28	SFUZC02N01	Rod, Rest Switch (1)
29	SFUMC02N12	Holder, Lead Wire (1)
30	SFUMV05N23	Cap (1)
31	SFATQ06N01E	Hinge (2)
32	SFUKC13N01E	Base, Tonearm (1)
33	SFGZBL3N03	Rubber Cushion (1)
34	SFGCC05N05	Rubber Cushion, Guide Rail (1)
35	SFUMC05N22	Pulley (1)
36	SFQCC05N01	Spring, Insulator (4)
37	SFGAJ02N01	Insulator (4)
38	SFAUC13N01	Bottom Cover (1)
39	SFEHJ02N02E	Phono Output Cord (1)
40	SFKTQ06N01	Knob, Selector (3)
41	SFKTQ06N02	Knob, Tonearm Down Adjuster (1)
42	SFUMJ02N14	Cover, Rest Switch (1)
43	○ SFACC13N011	Cover (1)
43	Ⓚ SFACC13N211	Cover (1)
44 [XA]	SFNNC13X01	Name Plate (1)
44 [EG]	SFNNC13R01	Name Plate (1)
44 [PC]	SFNNC13P02	Name Plate (1)
44 [PA, PE]	SFNNC13P01	Name Plate (1)
44 [E, EC]	SFNNC13S01	Name Plate (1)
44 [EK, XL]	SFNNC13G01	Name Plate (1)
44 [other]	SFNNC13Q01	Name Plate (1)
45 [XL]	⚠SFDJHSC0491	AC Socket (1)
45 [XA, PA, PE, PC]	⚠SFDJHSC04912	AC Socket (1)
45 [other]	⚠SFDJHSC0516	AC Socket (1)
46	SFDJJ02N04E	Jack, Phono Output (1)
47	SFWEC06N01	45 rpm Adaptor (1)
48	SFQAC06N01	Spring, 45 rpm Adaptor (1)
49	SFTGQ06N01	Turntable Mat (1)
50	SFTEQ05N01	Turntable Platter (1)
51	SFTMC07-01E	Magnet (1)
52	SFMGQ34N01	Cover, Coil (1)
53	SFMZC06N01R	Stator Flame Ass'y (1)
54	SFDJC13N03E	Connector, Ass'y (1)
55	SFGKQ06N01	Cap (1)
56	SFQA913-01	Spring (1)
57	SFQHQ34N22	Spring (1)

Ref. No.	Part. No.	Description	
58	SFUMC13N03	Prism	(1)
59 ○ Except for [XA, PA, PE, PC]	SFACC13N012	Cover	(1)
59 Ⓚ Except for [XA, PA, PE, PC]	SFACC13N212	Cover	(1)

TONEARM PARTS

61	SFPAMJ0201A	Tonearm Ass'y	(1)
62	SFPKDJ0201R	Tonearm Base	(1)
62-1	SFPSP00504	Spring	(1)
63	SFPGML1101	Rubber, Tonearm Guide	(2)
65	SFPABJ0205R	Sensor Ass'y	(1)
66	SFDZC05N01E	Solenoid Ass'y	(1)
67	SFPCS0Q601	Cover, Indicator	(1)
68	SFPAK0Q601	Plate, Indicator	(1)
69	SFPCSJ0201	Holder, LED	(1)
70	SFPGM0Q601	Rubber, LED	(1)
71	SFPSP00302	Spring, Adjustor	(2)
72	EPC-P33	★ Cartridge	(1)
73	EPS-33ES	★ Stylus	(1)

SCREWS, WASHERS AND NUTS

N1	SFXGQ06N01	Screw	(2)
N2 Ⓢ	XTV3+10BFN	Screw, ⊕3×10	(11)
N3	XTW3+14TFZ	Screw, ⊕3×14	(2)
N4	XTV3+6JFZ	Screw, ⊕3×6	(4)
N5	XTW3+14QFYR	Screw, ⊕3×14	(6)
N6	XSN3+30S	Screw, ⊕3×30	(1)
N7	XWE3D10	Washer, φ3	(1)
N8	XNC3HS	Nut	(1)
N9	CSTW3	Washer	(2)
N10	XWE3A8BW	Washer	(1)
N11	XTV3+20J	Screw, ⊕3×20	(1)
N12	XTN16+10G	Screw, ⊕1.6×10	(1)
N13 Ⓢ	XTV3+6BFN	Screw, ⊕3×6	(4)
N14	SFXWC06N02	Washer	(1)
N15 Ⓢ	XSN3+5S	Screw, ⊕3×5	(3)
N16	SFPEV0Q601	Screw, Cartridge	(1)
N17	XTS26+6JFZ	Screw, ⊕2.6×6	(1)
N18	XYN2+C4FZ	Screw, ⊕2×4	(1)
N19	SFXN623-1	Nut	(1)
N20	SFPTN00301	Screw	(1)
N21 Ⓢ	XSN3+12S	Screw, ⊕3×12	(1)
N22 Ⓢ	XWA3B	Washer	(1)
N23	XTN23+6JFZ	Screw, ⊕2.3×6	(1)

ACCESSORIES

A1 [EK]	SFNUC13G01	Instruction Book	(1)
A1 [Ei]	SFNUC13I01	Instruction Book	(1)
A1 [PA, PE, PC]	SFNUC13P01	Instruction Book	(1)
A1 [E, EB EH, EC]	SFNUC13S01E	Instruction Book	(1)
A1 [other]	SFNUC13X01	Instruction Book	(1)
A2	SFDHC05N01	Phono Output Cord	(1)
A3	SFDLJ02N11E	Ground Wire	(1)
A4 [EK] ⚠	SFDAC05G02	AC Cord	(1)
A4 [XL] ⚠	SFDAC05L01	AC Cord	(1)
A4 [XA] ⚠	SFDAC05X02	AC Cord	(1)
A4 [PA, PE, PC] ⚠	SFDAC05N01	AC Cord	(1)
A4 [other] ⚠	SFDAC05E02	AC Cord	(1)
A5 [XA] only ⚠	SFDKI19118	2 Pin Plug	(1)
A6 [PA, PE, PC] only ⚠	QJP0603S	Adaptor	(1)

PACKING PARTS

P1 ○ [EF] only	SFHPC13C01	Carton Box	(1)
P1 ○ [other]	SFHPC13M01	Carton Box	(1)
P1 Ⓚ [EF] only	SFHPC13F21	Carton Box	(1)
P1 Ⓚ [other]	SFHPC13S21	Carton Box	(1)
P2	SFHHC13N01	Pad, Front	(1)
P3	SFHHC13N02	Pad, Rear	(1)
P4	SFHKC05N01	Clamper, Turntable Platter	(2)
P5	SFHKQ06N01	Spacer, Tonearm	(1)
P6	SFHSC13N01	Spacer, Dust Cover	(1)
P7	SFYH60×60	Polyethylene Bag	(1)
P8	SFYH17×16	Polyethylene, Cord	(1)
P9	SFYF32A35	Polyethylene, Turntable Mat	(1)
P10	SFHDD04N01	Pad, Turntable Mat	(1)

Color	Areas	Color	Areas
(S) (K)	[E] ..... Switzerland and Scandinavia.	(S) (K)	[XA] .... Southeast Asia, Oceania, Africa, Middle Near East and Central South America.
(S) (K)	[EK] .... United Kingdom.	(S) (K)	[PA] .... Far East PX.
(S) (K)	[XL] .... Australia.	(S) (K)	[PE] .... European Military.
(S) (K)	[EG] ... F.R. Germany.	(S) (K)	[PC] .... European Audio Club.
(S) (K)	[EB] .... Belgium.		
(S) (K)	[EH] .... Holland.		
(S) (K)	[EF] .... France.		
(S) (K)	[Ei] ..... Italy.		
(S) (K)	[EC] .... Czechoslovakia.		

Printed in Japan
850505600 Ⓢ TK/HY